CNSolution™ 9310 Cyanide Analyzer Design & Performance Specifications

CNSolution 9310 Cyanide Analyzer Specifications	
Analyzer Function	Measurement of available cyanide in leach tanks to monitor and provide feedback control of the cyanide level in each leach circuit
Duty / Operation	Continuous - 24 hours per day, 365 days per year (except for scheduled maintenance)
Cyanide Measurement Technique	Gas-diffusion amperometry
Cyanide Measurement Reference Methods	OIA-1677 / ASTM D 6999-09 (Available Cyanide)
Measurement Ranges	0.2 to 50ppm CN 2.0 to 500 ppm CN 20 to 2,000 ppm CN
Measurement Accuracy	±5% at 50 ppm
Detection Limit	0.05 mg/L CN
Calibration	2-point calibration
Analysis Time	<3 minutes
Sample pH	9 - 11
Sample Volume	≤ 1 milliliter per analysis
Reagent Requirements	0.1 M Sodium Hydroxide (NaOH) 10 liters per week in continuous operation
Reagent Requirements	Reagent Water (or CN and Chlorine free water) 10 liters per week in continuous operation

Reagent Requirements	1M Hydrochloric Acid (HCl) <1 liter per week in continuous operation
Cyanide QC Standard	150 ppm Copper Cyanide
Cyanide QC Standard	25 ppm Copper Cyanide
Power Requirements	$24V_{DC}$
Operator Interface	Windows® CE-based color touch-screen display
Analyzer Enclosure	NEMA 4X / IEC Class IP-56
Analyzer Dimensions	48.3 cm H x 31.1 cm W x 31.1 cm D (Figure 1) 19 in. H x 12.25 in. W x 12.25 in. D
Analyzer Weight	11 kg 24 lbs.
Data Export	To PC or LAN via Ethernet in Microsoft® Excel© ready .CSV format, or using USB memory stick
Output Relays	(2) System alarm, sample alarm
Analog Output	(2) 4-20 mA (user-configurable concentration)
Form of Cyanide Measured	WAD - Weak Acid Dissociable Cyanide-metal complexes that react with HCl
Recovery of Metal-Cyanide Complexes	Complete recovery of all copper complexes
Recovery of Metal-Cyanide Complexes	Complete recovery of all zinc complexes
Recovery of Metal-Cyanide Complexes	Complete recovery of all silver complexes
Recovery of Metal-Cyanide Complexes	Partial recovery of mercury complexes
Recovery of Metal-Cyanide Complexes	Nickel complexes are not detected
Recovery of Metal-Cyanide Complexes	Iron complexes are not detected
Recovery of Metal-Cyanide Complexes	Gold and platinum complexes are not detected
Interferences	Thiosulfate, thiocyanate, cyanate and sulfite do not interfere
Interferences	Turbidity $\leq$ 300 NTU does not interfere
Interferences	Dissolved Solids up to 30,000 ppm do not interfere
Interferences	Xanthate Flotation Agents will interfere with measurements
Analyzer Mounting Options	Benchtop stand for laboratory operation (Figure 2)
Analyzer Mounting Options	Wall mounting (Figures 3 and 4)
Analyzer Mounting Options	Panel mounting (Figure 5)
Analyzer Mounting Options	Panel mounting inside environmental cabinet (Figure 6)

Slurry Filtration / Sampling System Specifications	
Slurry Filtration / Sampling System Function	Filters leaching slurry to deliver filtrate to cyanide analyzer at user defined time intervals
Slurry Composition - Solids	Filters slurries with <60% solids
Slurry Specific Gravity	2.5 - 3 (typical)
Filter	Replaceable filter sock with 10-micron nominal pore size
Filter Sock	3.25 inch O.D. x 14.5 inches long
Filtrate Delivered to Analyzer	≥ 75 mL per 3 minute cycle
Sampling Filter Support	316 stainless steel (Figure 9)
Sampling Filter Support Dimensions	3.25 inch O.D. x 13.46 inches long
Slurry Filtration Pump	Industrial Grade peristaltic pump
Slurry Filtration Pump Motor	Wound motor, variable speed
Slurry Filtration System Control Box	Electronic control components (Figures 7 and 8)
Maximum Distance from Sampling Point	50 feet (16 meters)
Filter Backflush	Compressed air at user programmed time intervals
Compressed Air Requirements	70 psi plant or compressed air
Power Requirements	115V 60Hz or 230V 50/60 Hz
Sample Tubing	0.25 inch O.D. x 0.170 inch I.D., PET (Teflon optional)
Air Tubing	0.25 inch O.D. x 0.170 inch I.D., high pressure PET

Table of Figures	
Figure 1	CNSolution 9310 Cyanide Analyzer - Dimensions
Figure 2	Benchtop Stand for CNSolution 9310 Cyanide Analyzer
Figure 3	Location of Mounting Points for Wall Mounting a CNSolution 9310 Cyanide Analyzer
Figure 4	Unistrut Wall Mounting Kit and Instrument Mounting Panel for CNSolution 9310 Cyanide Analyzer
Figure 5	CNSolution 9310 Analyzer and Sampling System Control Box Installed on Panel - Dimensions
Figure 6	CNSolution 9310 Analyzer, Sampling System Control Box, and Pump Installed Inside Environmental Cabinet - Dimensions
Figure 7	Slurry Filtration / Sampling System Control Box - Dimensions
Figure 8	Slurry Filtration / Sampling System Control Box Mounted on Panel - Dimensions
Figure 9	Exploded View Diagram of CN 9310 Filter Probe Assembly

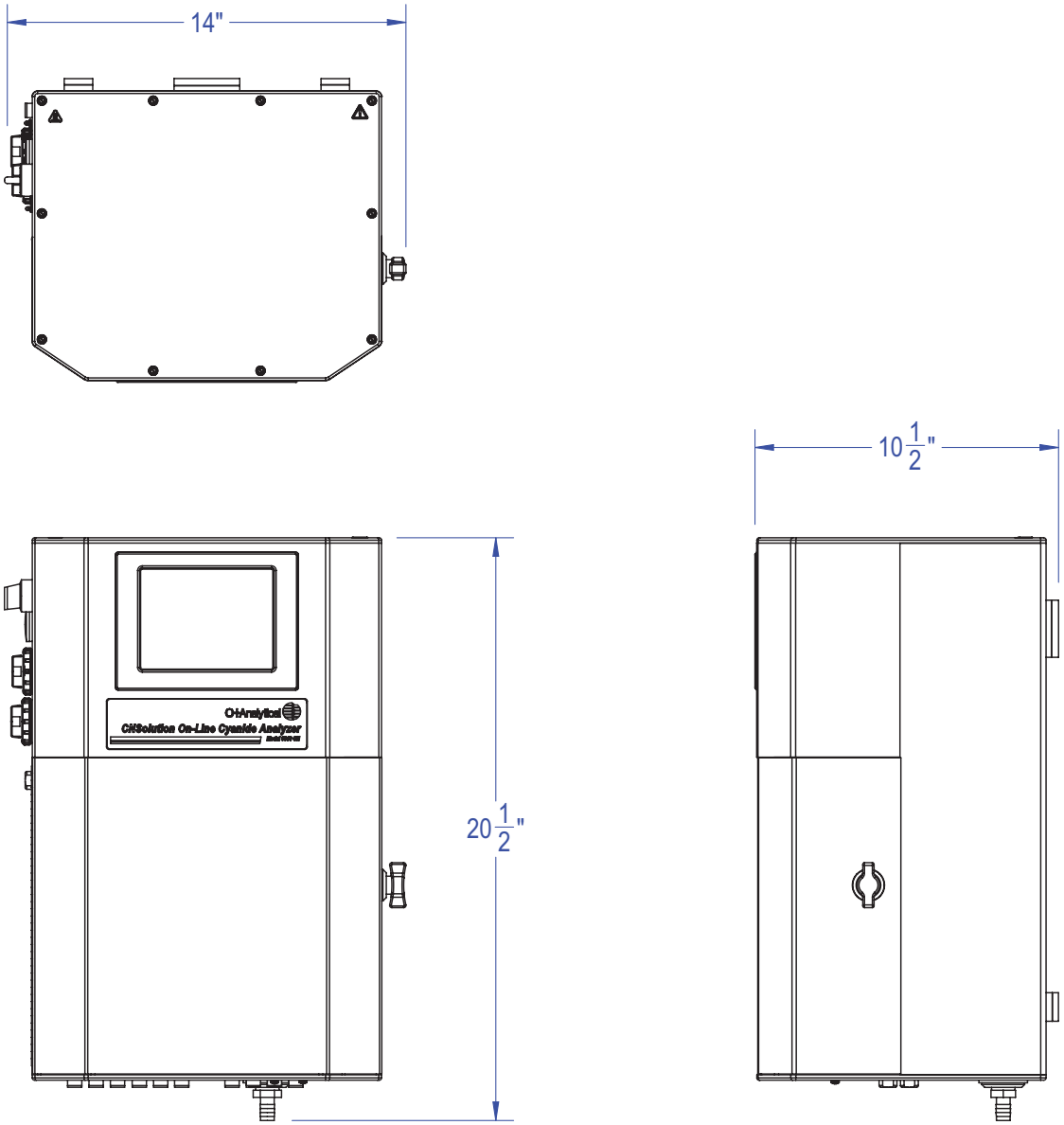

Figure 1. CNSolution 9310 Cyanide Analyzer Dimensions

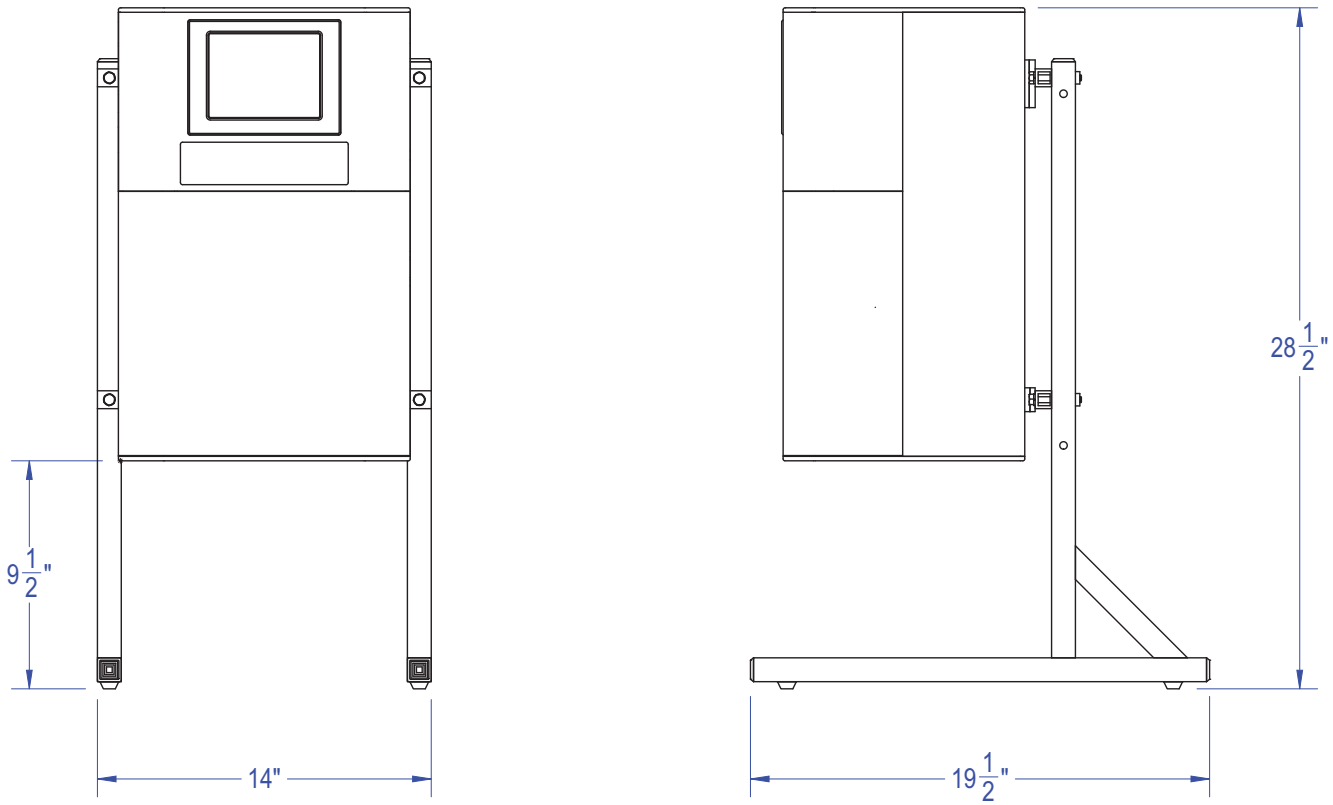

Figure 2. Benchtop Stand for CNSolution 9310 Cyanide Analyzer

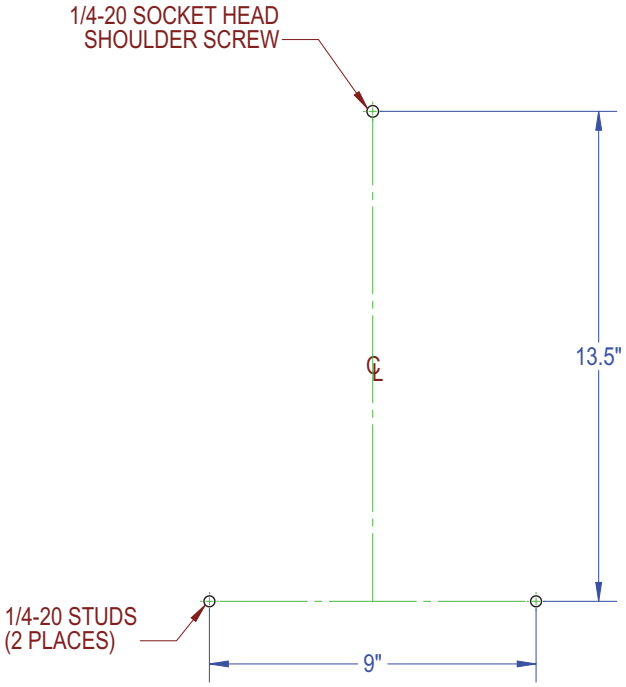

Figure 3. Location of Mounting Points for Wall Mounting a CNSolution 9310 Cyanide Analyzer

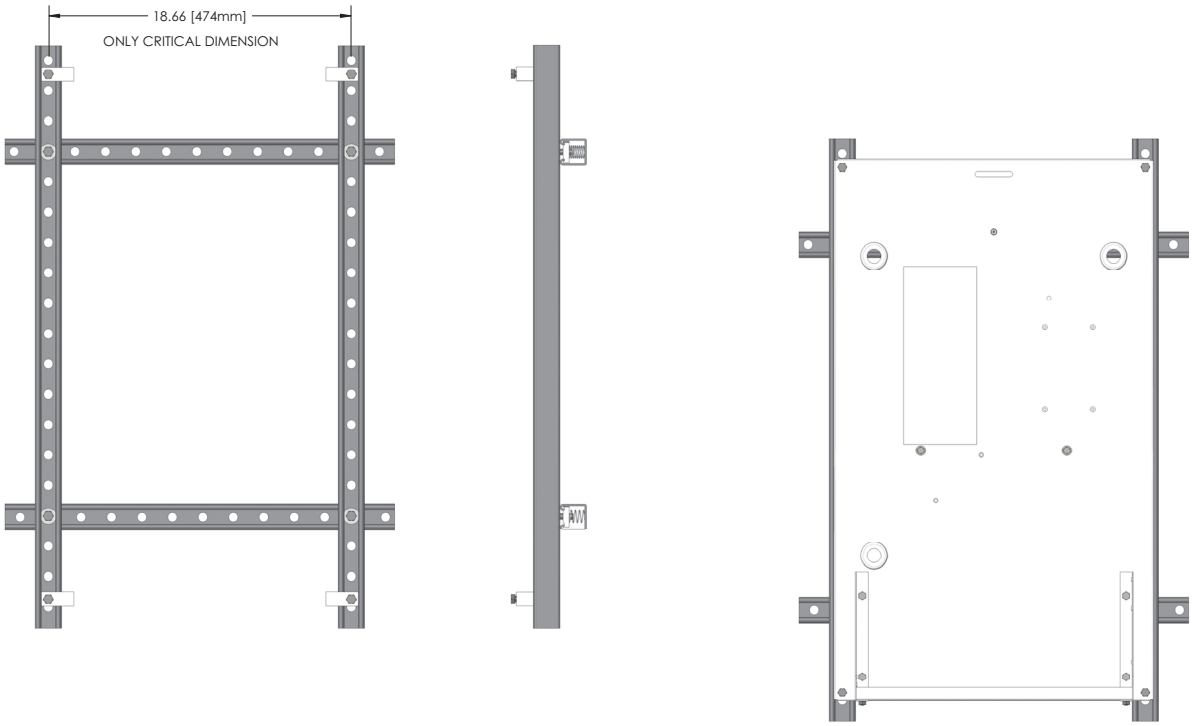

Figure 4. Unistrut Wall Mounting Kit and Instrument Mounting Panel for CNSolution 9310 Cyanide Analyzer

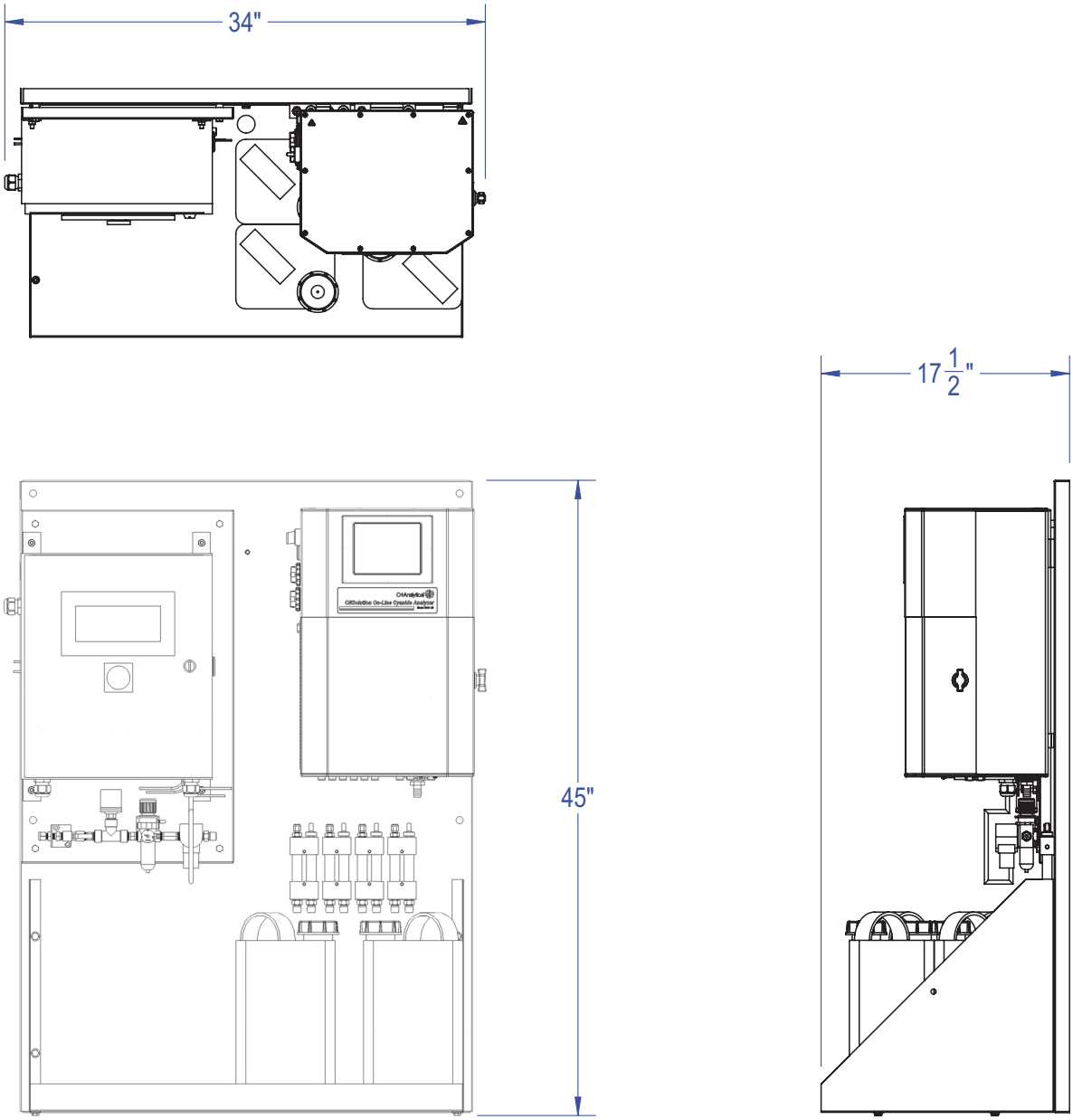

Figure 5. CNSolution 9310 Analyzer and Sampling System Control Box Installed on Panel - Dimensions

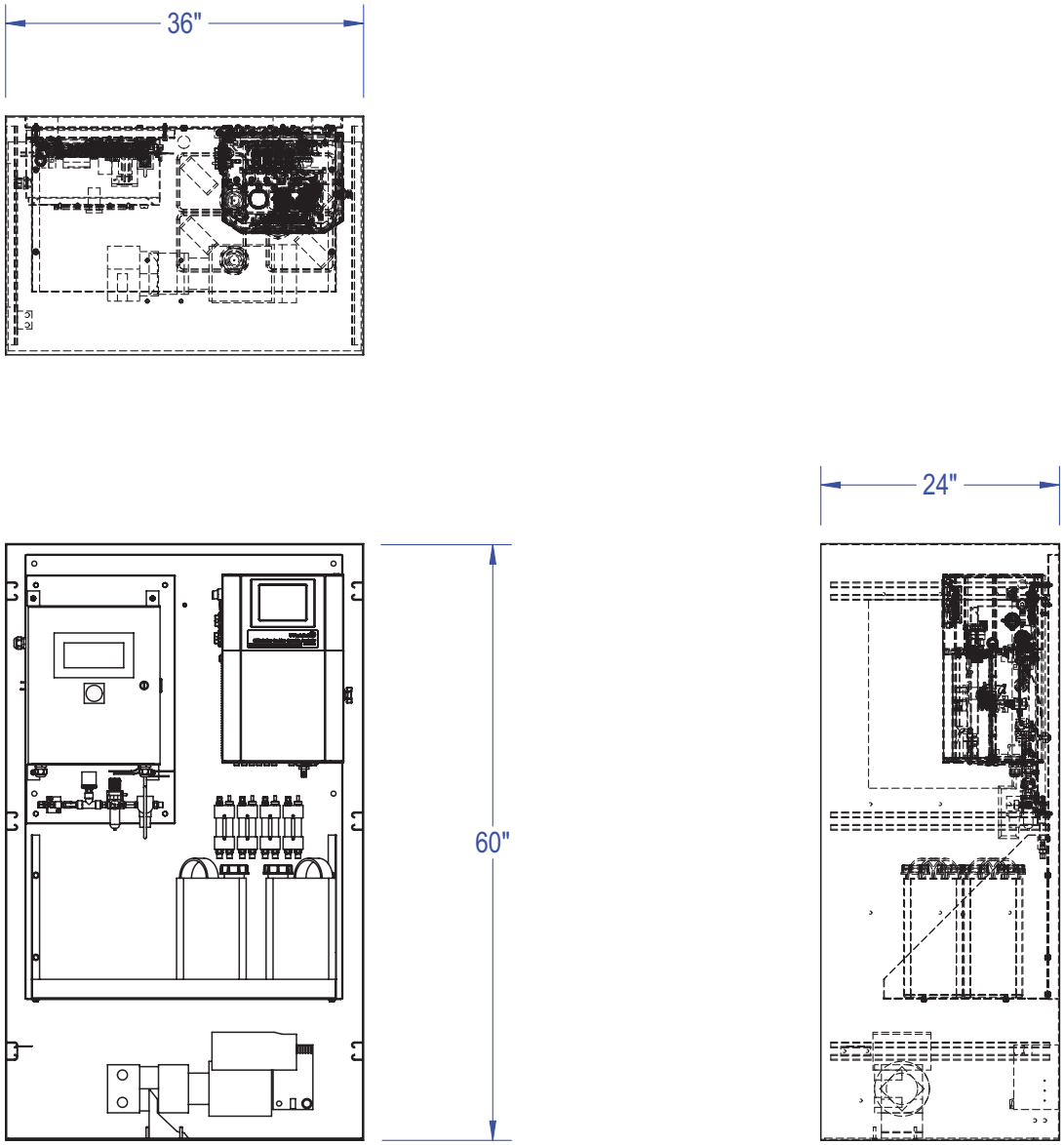

Figure 6. CNSolution 9310 Analyzer, Sampling System Control Box, and Pump Installed Inside Environmental Cabinet - Dimensions

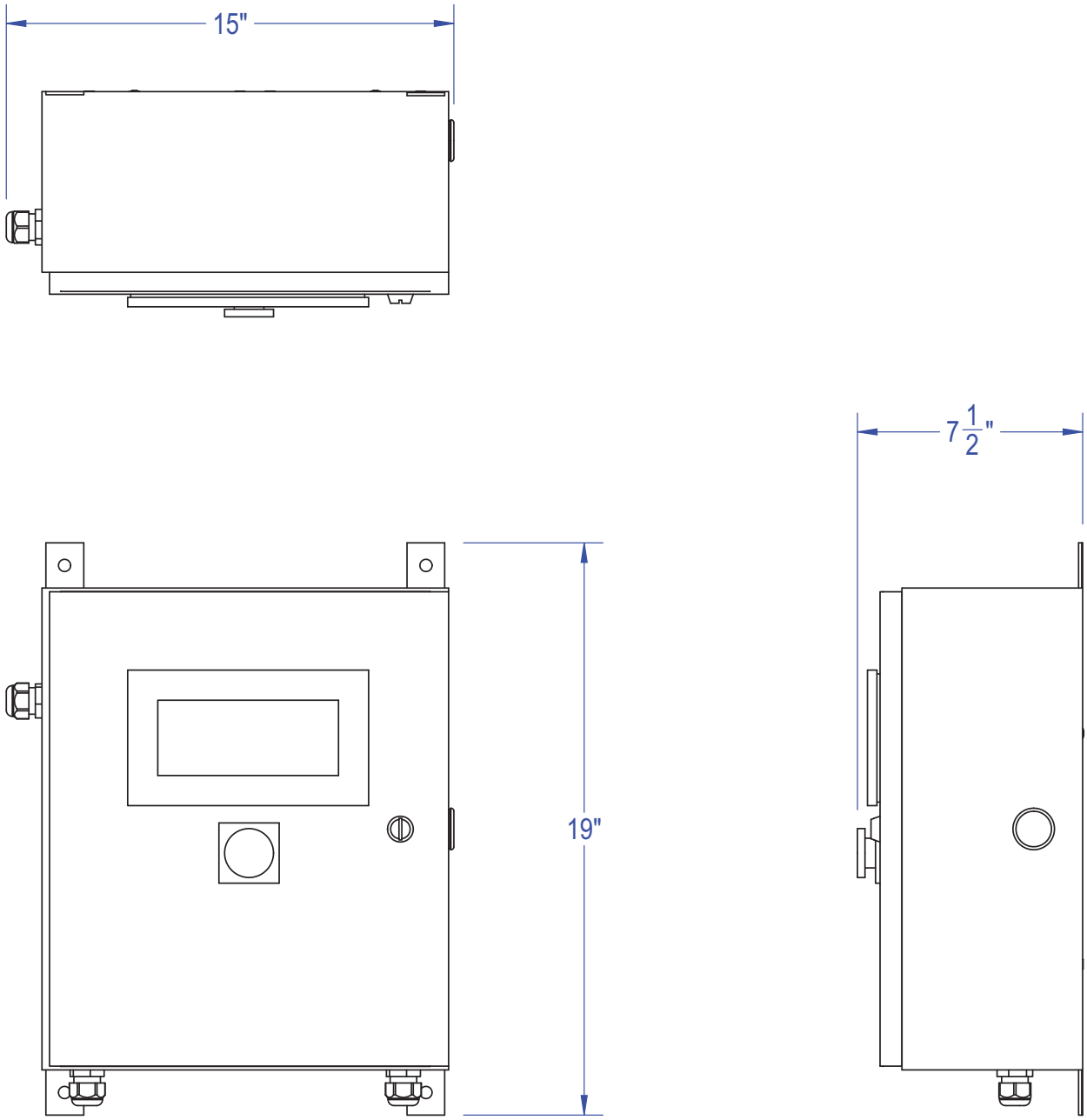

Figure 7. Slurry Filtration / Sampling System Control Box - Dimensions

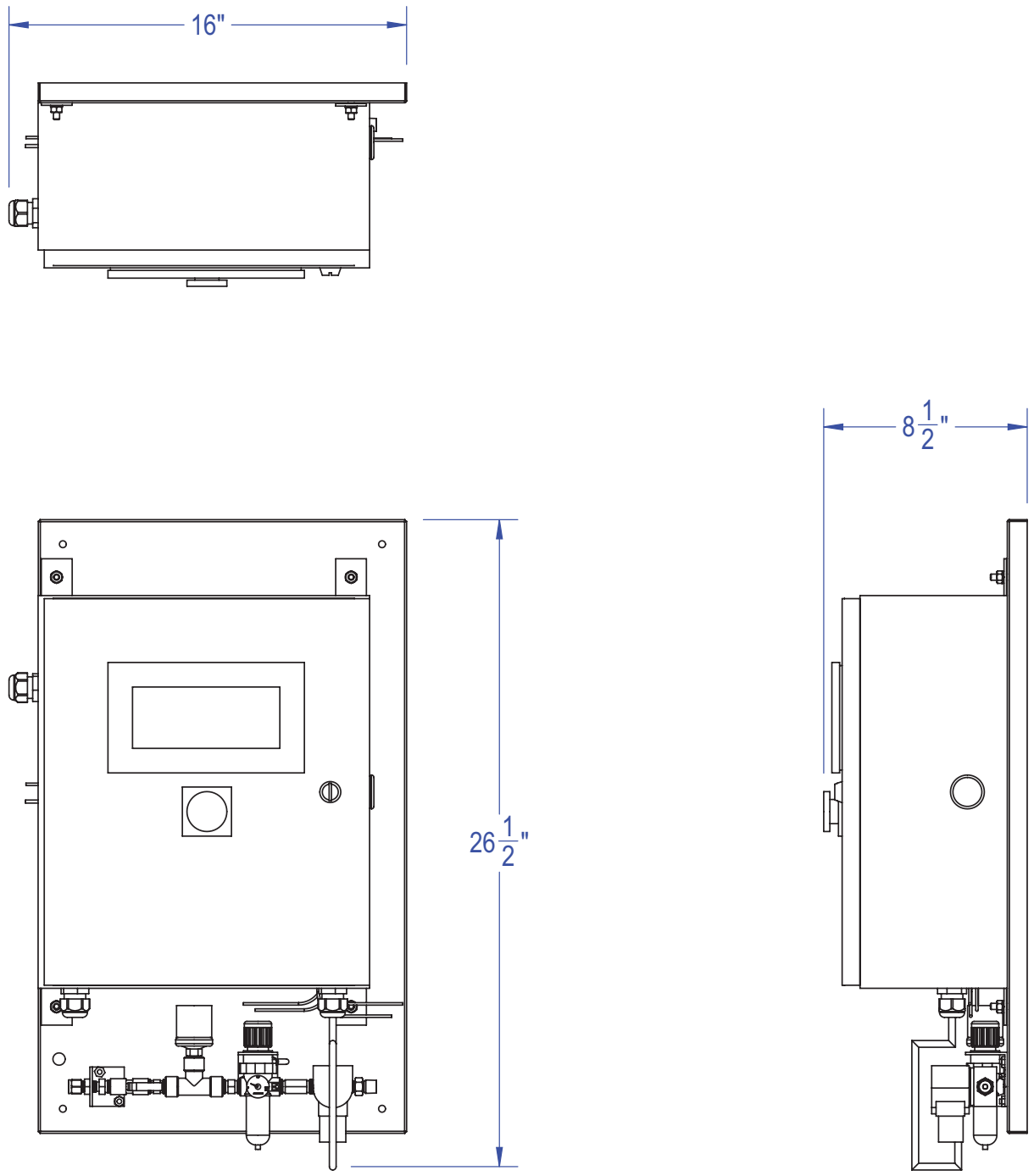

Figure 8. Slurry Filtration / Sampling System Control Box Mounted on Panel - Dimensions

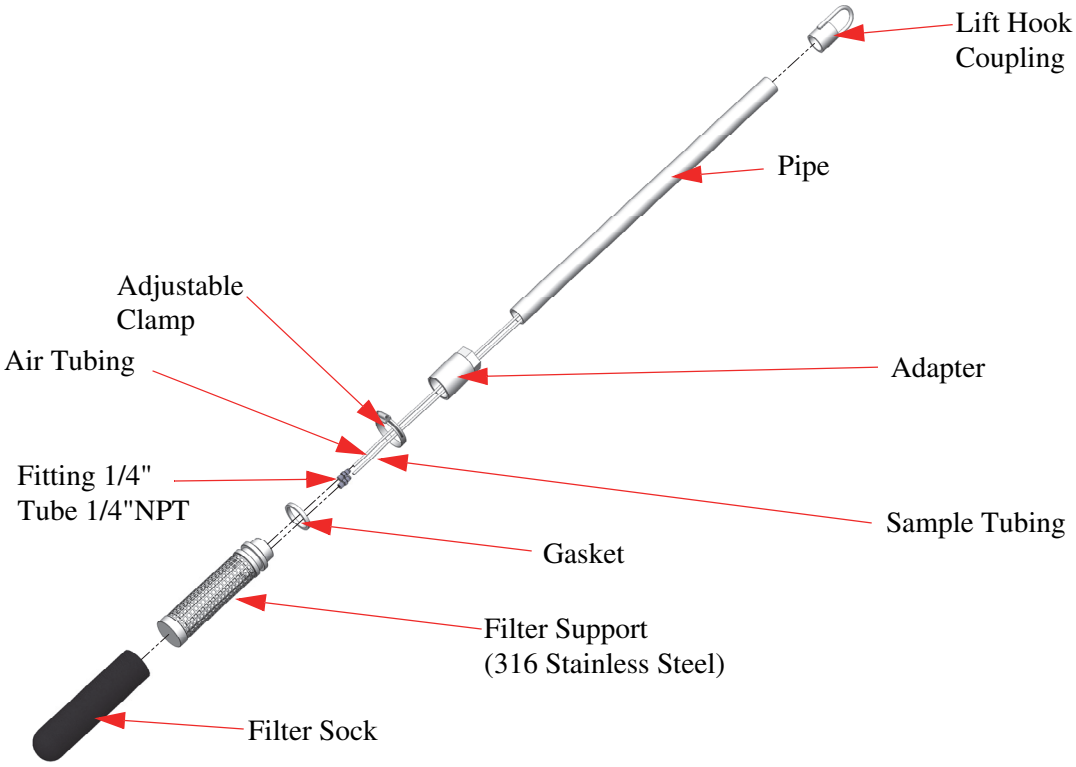

Figure 9. Exploded View of the CNSolution 9310 Filter Probe Assembly