Cyanide Methods and the 2010 MUR

William Lipps

Market Specialist

O·I·Analytical

Fundamentals of Cyanide Chemistry

O·I·Analytical

Free Cyanide is the CN ion and HCN, generate HCN at pH 6

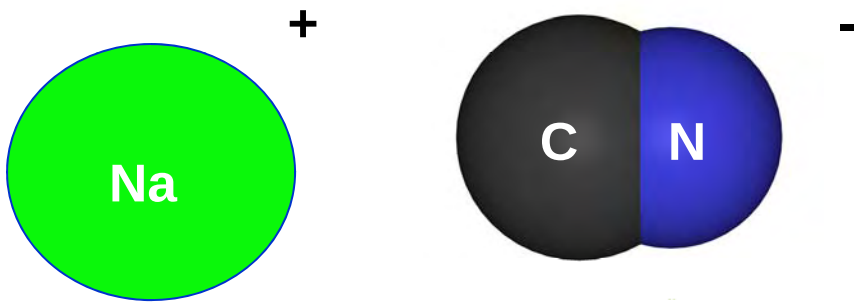

Cation

Polyatomic anion

O·I·Analytical

Metal Complexes that require acid to generate HCN – Available CN

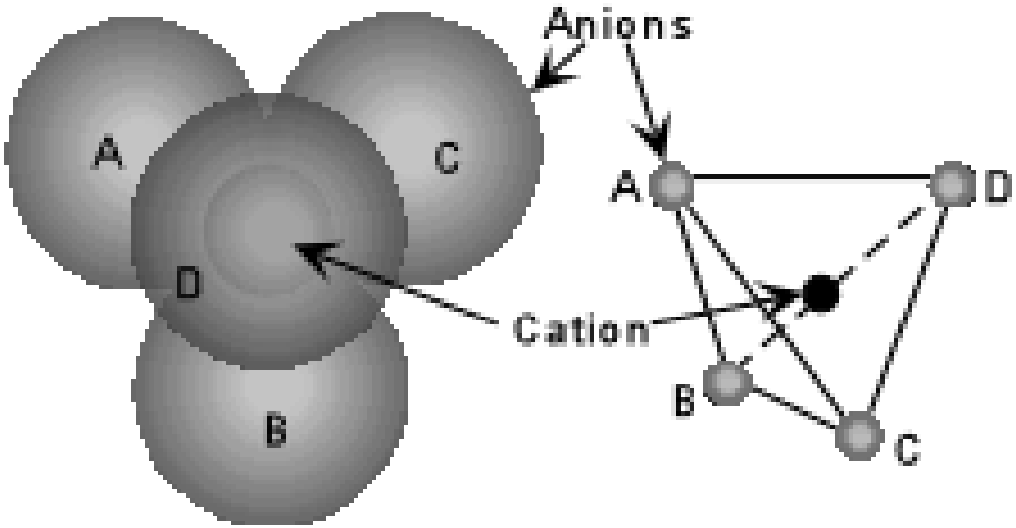

O·I·Analytical

Strong Metal Complexes are stable in acid solution – require UV or “distillation”

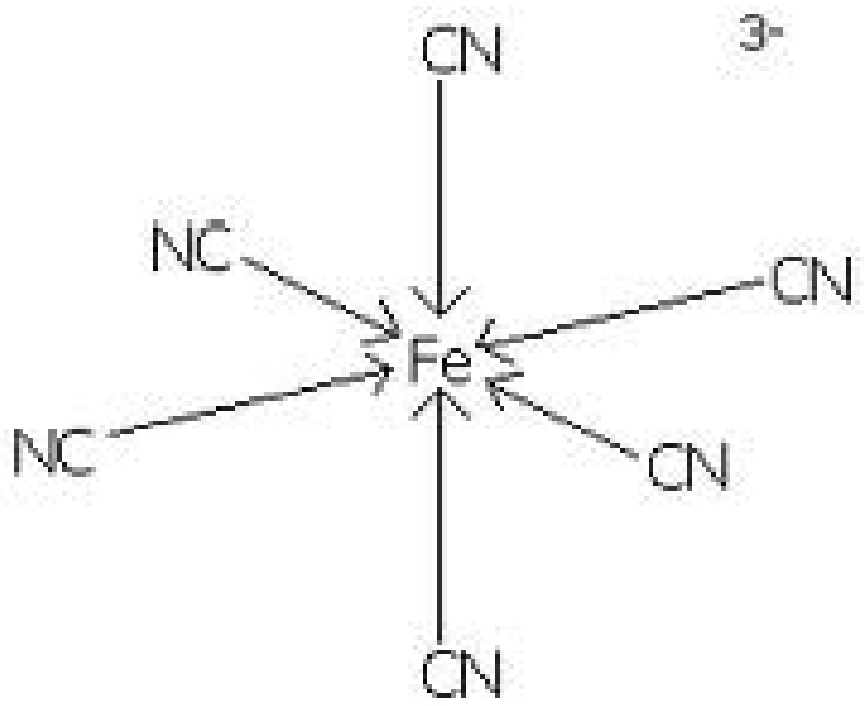

O·I·Analytical

Parameter	Methodology[58]	EPA[52]	Standard Methods	ASTM	USGS/AOAC/Other
23. Cyanide—Total, mg/L	Automated UV digestion /distillation and Colorimetry				Kelada–01[55]
	Segmented Flow Injection, In-Line Ultraviolet Digestion followed by gas diffusion amperometry			D7511-09e2	
	Manual distillation with $MgCl_2$ followed by any of the following:	335.4, Rev. 1.0 (1993)[57]	4500–CN^- B-1999 or C-1999	D2036–09(A), D7284-08	10–204–00–1–X[56]
	Flow Injection , gas diffusion amperometry			D2036-09(A) D7284-08	
	Titrimetric		4500–CN^- D-1999	D2036-09(A)	p. 22[9]
	Spectrophotometric, manual		4500–CN^- E-1999	D2036–09(A)	I–3300–85[2]
	Semi - Automated[20]	335.4, Rev. 1.0 (1993)[57]			10–204–00–1–X[56], I–4302–85[2]
	Ion Chromatography			D2036-09(A)	
	Ion Selective Electrode		4500–CN^- F-1999	D2036–09(A)	

O·I·Analytical

MUR Table 1b Examples

24. Cyanide-Available, mg/L	Cyanide Amenable to Chlorination (CATC); Manual distillation with $MgCl_2$ followed by Titrimetric or Spectrophotometric		4500–CN^- G-1999	D2036–09(B)	
	Flow injection and ligand exchange, followed by gas diffusion amperometry[59]			D6888–09	OIA–1677-09[44]
	Automated Distillation and Colorimetry (no UV digestion)				Kelada–01[55]
24.A Cyanide-Free, mg/L	Flow Injection , followed by gas diffusion amperometry			D7237-10	OIA–1677-09[44]
	Manual micro-diffusion and colorimetry			D4282-02	

O·I·Analytical

Cyanide methods measure the various cyanide "species"

Total CN

- **Strong Metal Complexes**
  - Fe, Co, Pt, Au
- **Available CN**
  - **Weak to Moderately Strong Metal Complexes**
    - Ag, Cd, Cu, Hg, Ni, Zn
  - **Free CN**
    - HCN
    - CN^-

O·I·Analytical

Cyanide “Preparation” Techniques

O·I·Analytical

Conway Micro-diffusion Cell

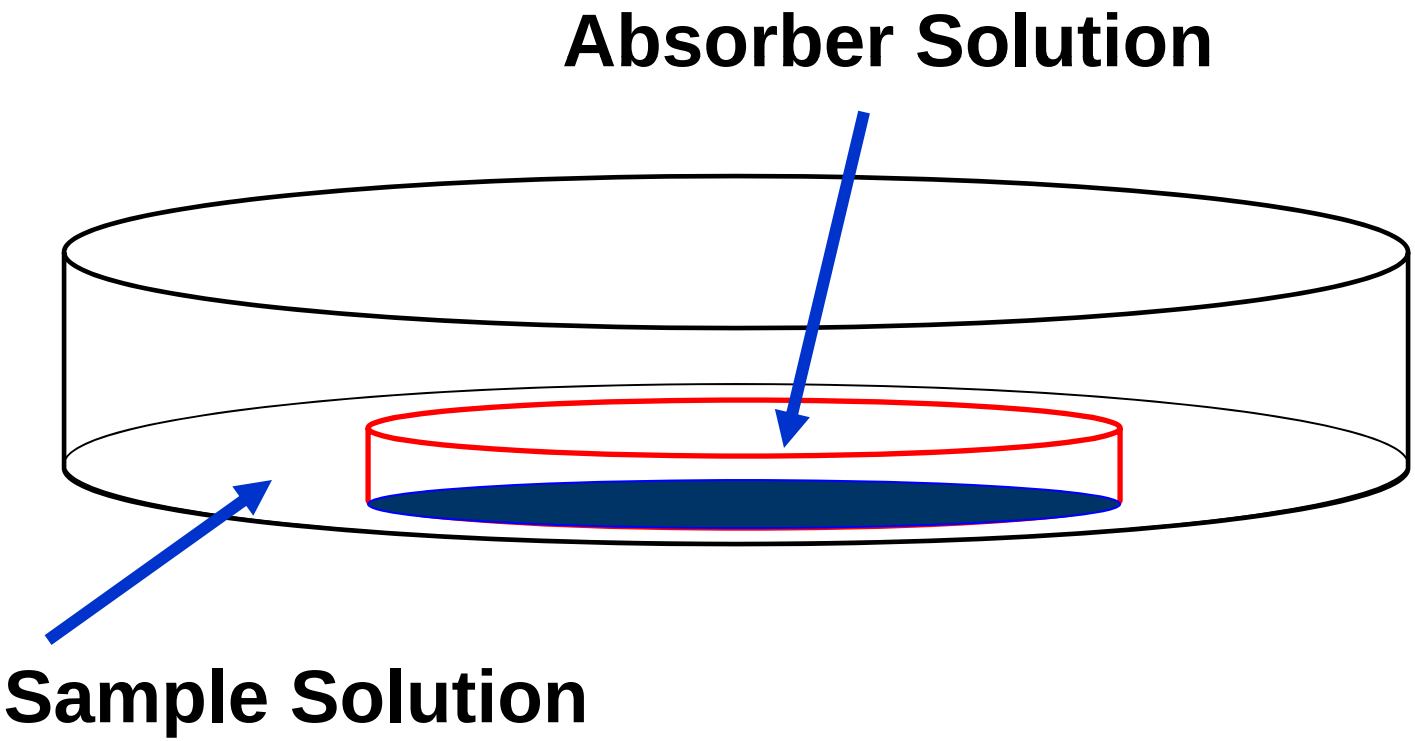

O·I·Analytical

Manual “distillation”

Macro
Distillation

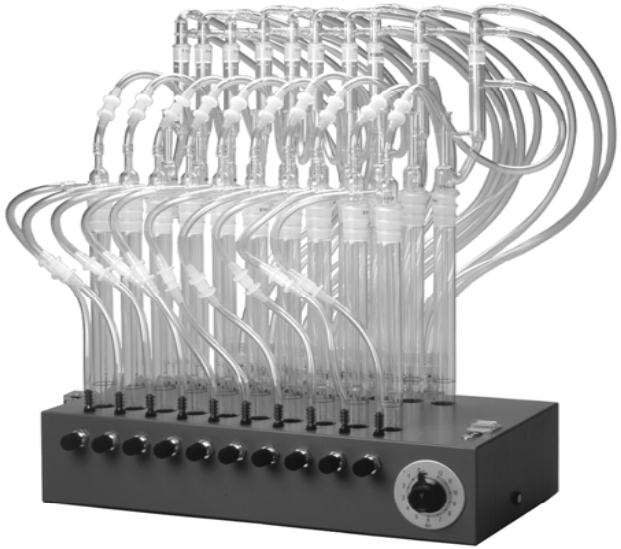

MIDI
Distillations

Automated Distillation

Distillation and condenser

Distillate

O·I·Analytical

Gas diffusion

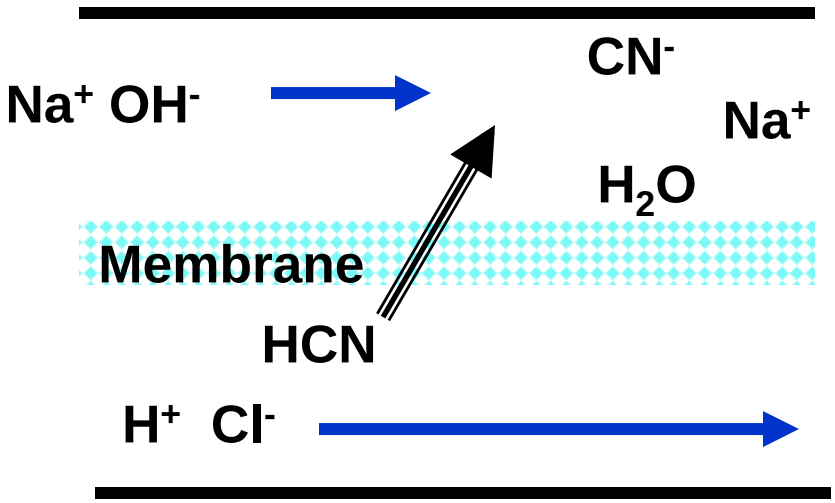

Ion Chromatography

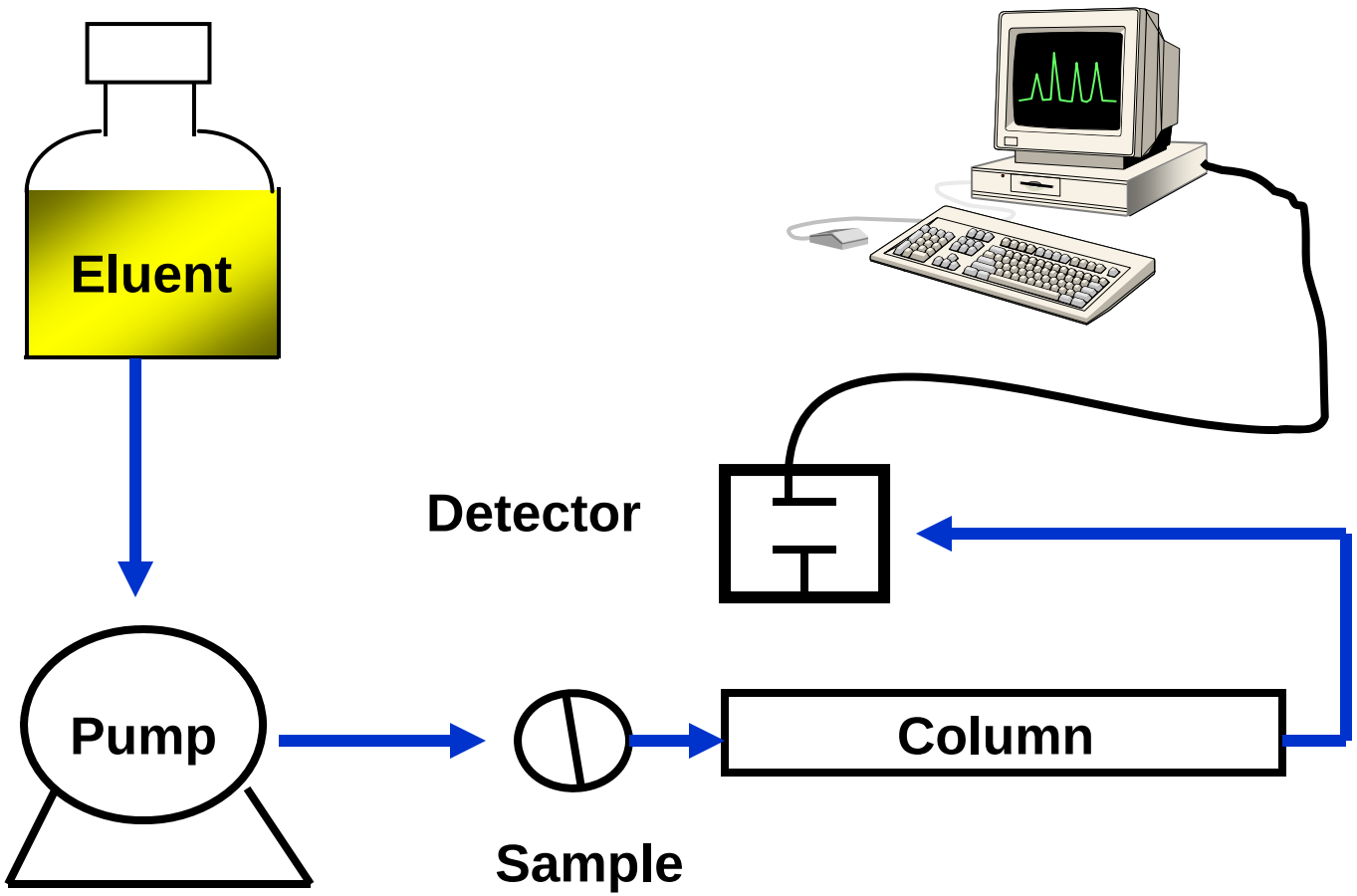

O·I·Analytical

Determinative Step

O·I·Analytical

Titration by silver ion

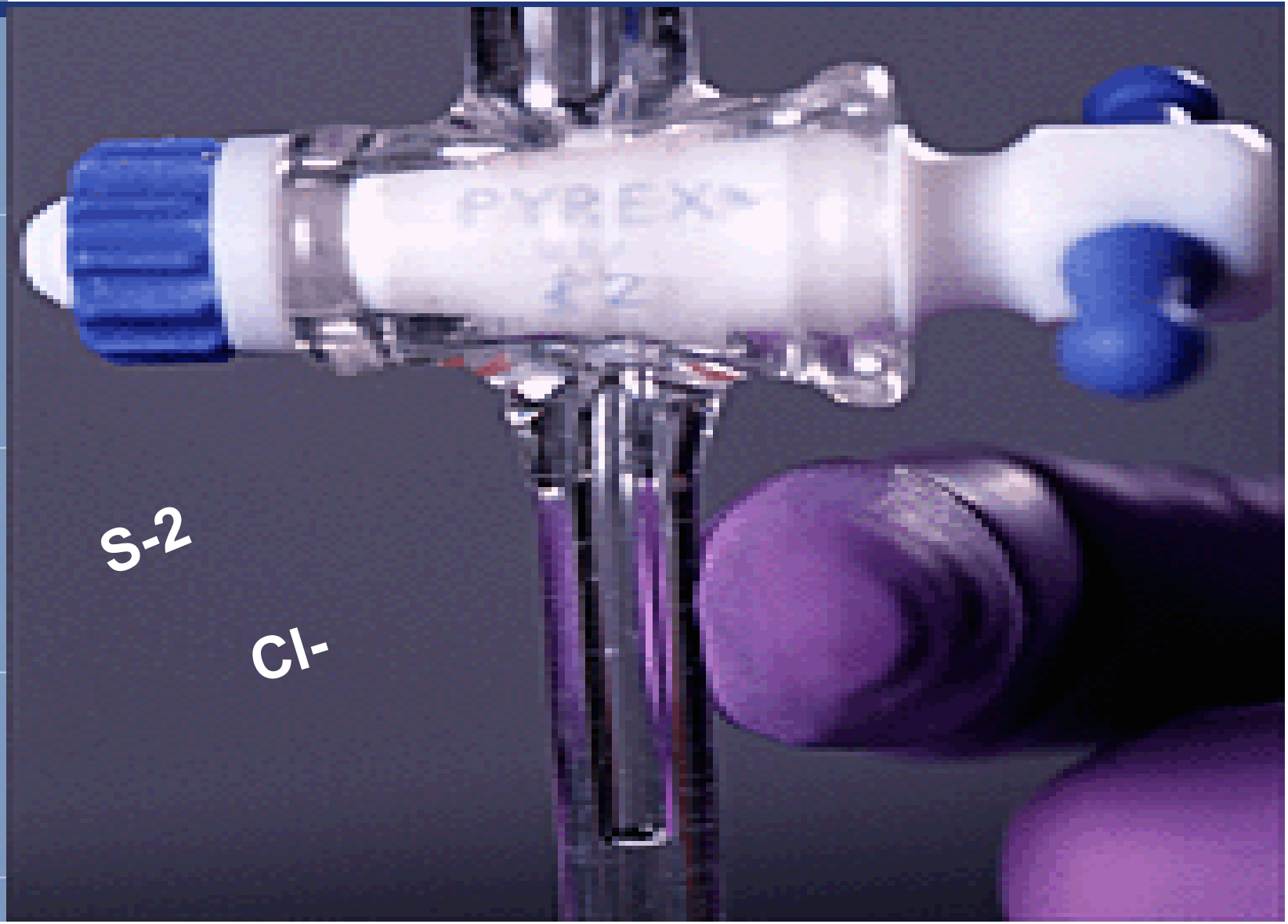

Ion Selective Electrode (ISE)

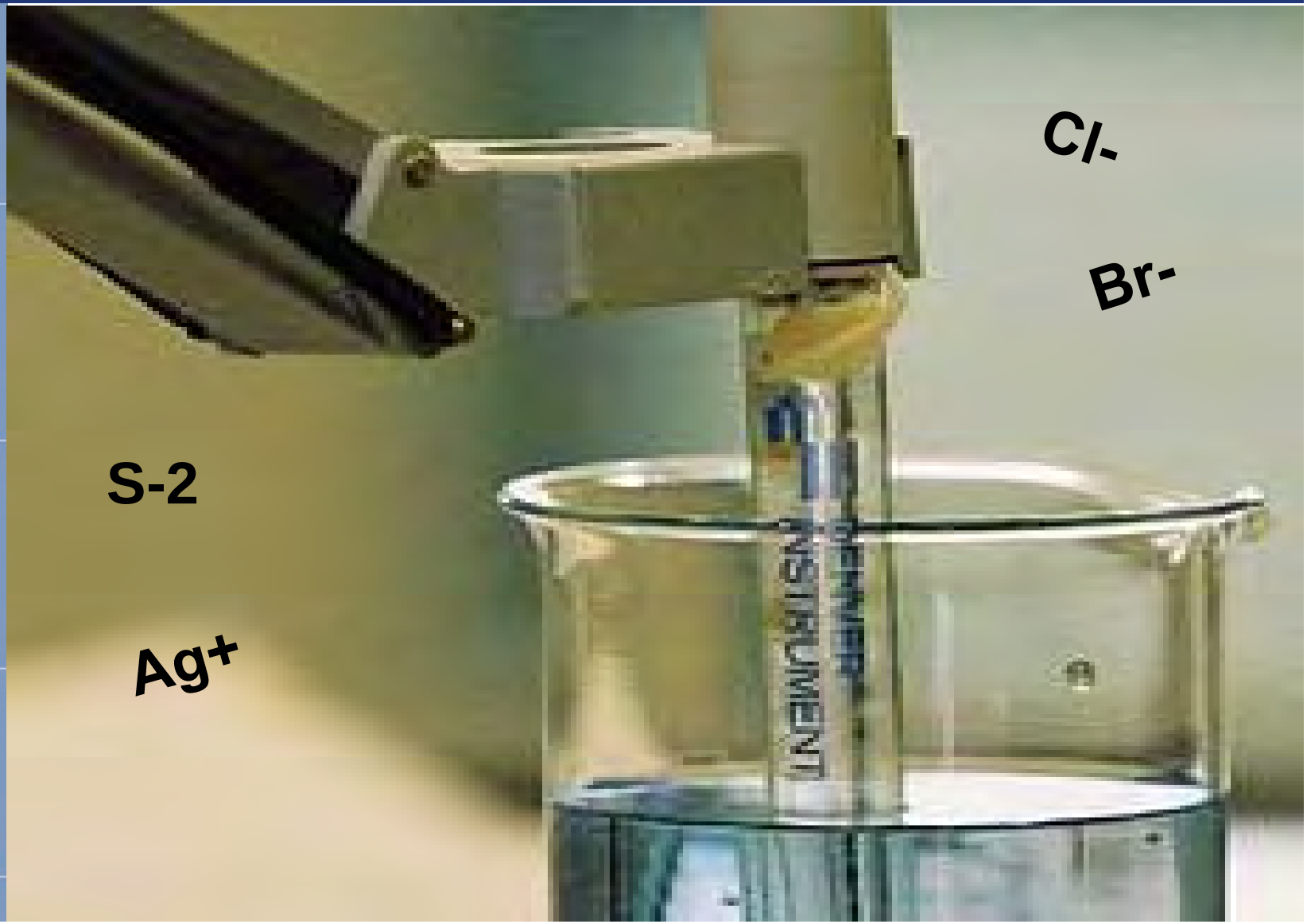

Colorimetric methods

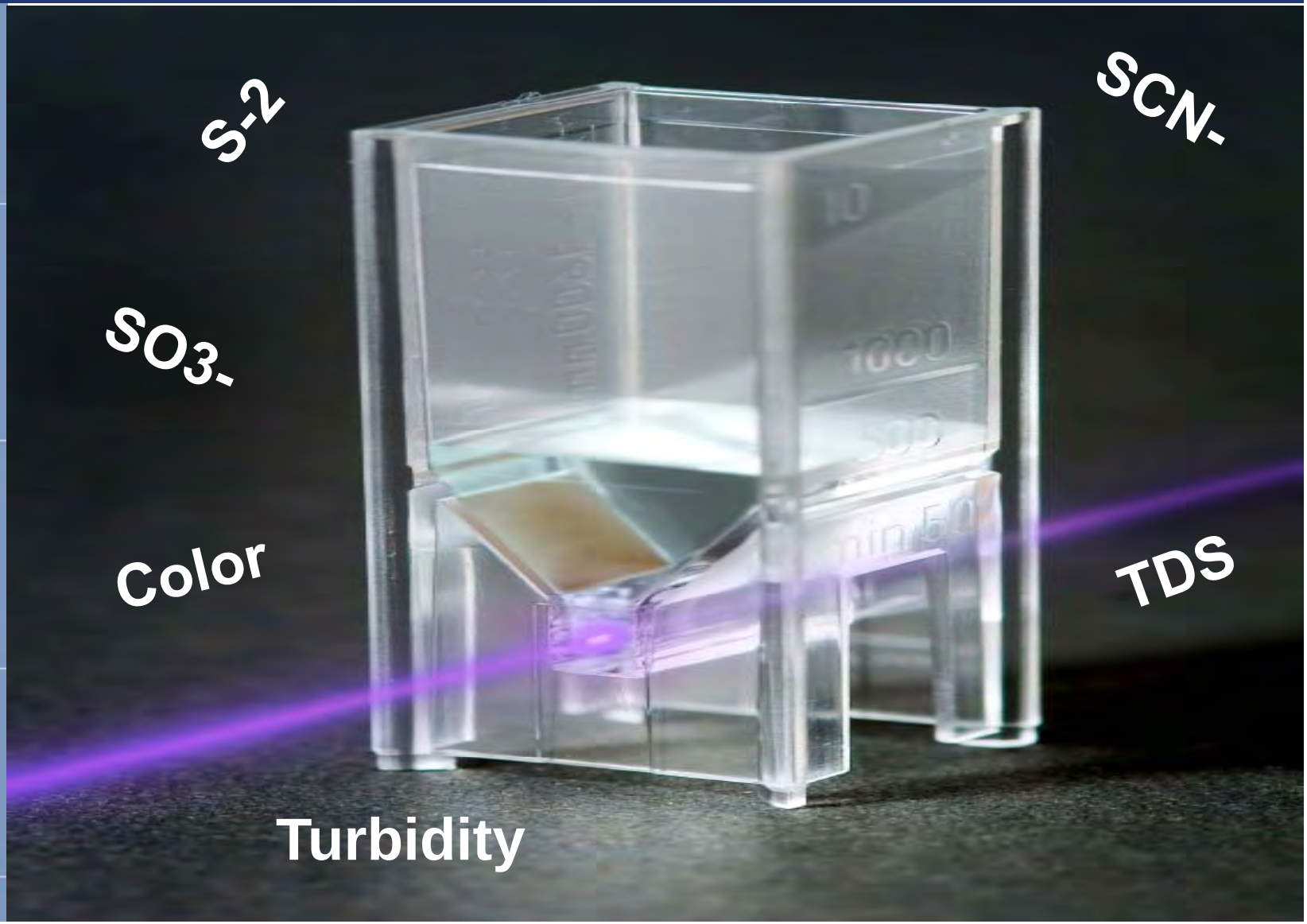

Electrochemistry

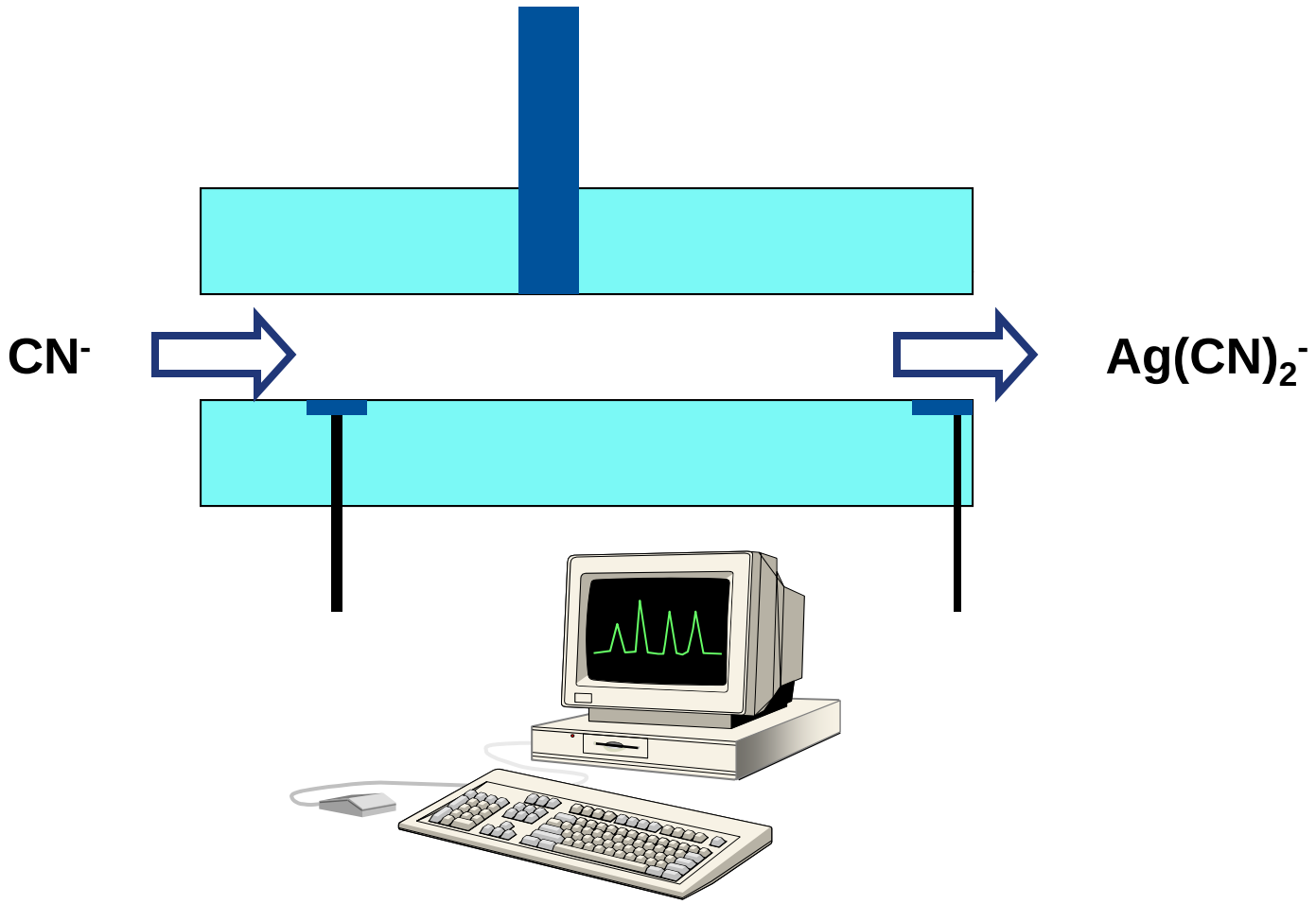

O·I·Analytical

Free Cyanide Analysis

O·I·Analytical

Free Cyanide Methods

Method Number	Description	Measurement
ASTM D4282	Passive Diffusion	Colorimetry
ASTM D7237	Flow Injection	Gas Diffusion - Amperometry

O·I·Analytical

ASTM D7237-06

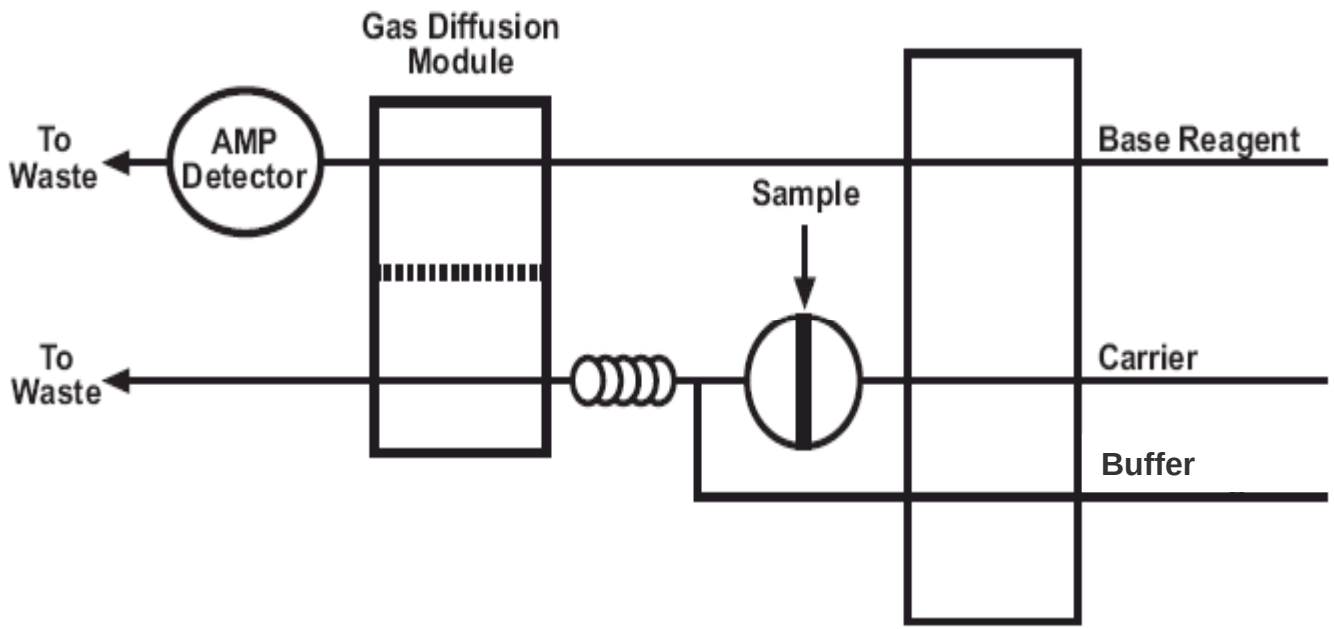

O·I·Analytical

Comparison of Results for Free Cyanide

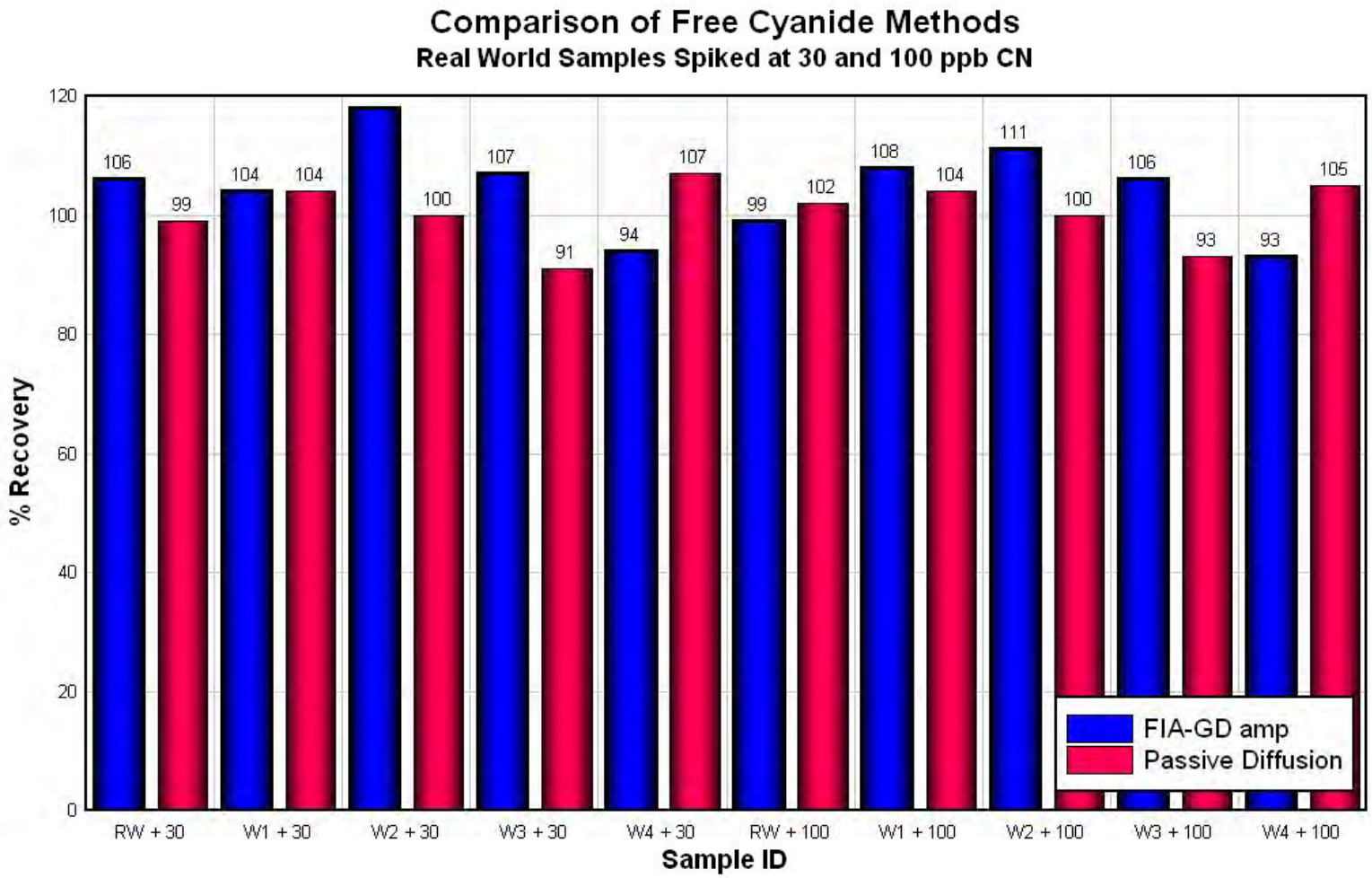

O·I·Analytical

Available Cyanide Analysis

O·I·Analytical

Amenable Cyanide—CATC methods measure “available cyanide”

Method Number	Description	Measurement
SM 4500-CN G	Alkaline Chlorination/ Manual Distillation	Colorimetry
ASTM D 2036	Alkaline Chlorination/ Manual distillation	Colorimetry, Gas Diffusion - Amperometry

O·I·Analytical

WAD Cyanide methods measure “available cyanide”

Method Number	Description	Measurement
SM 4500-CN I	Buffered pH 4.5 manual Distillation	Colorimetry
ASTM D 2036	Buffered pH 4.5 manual distillation	Colorimetry, Gas Diffusion - Amperometry

O·I·Analytical

Ligand Exchange methods measure available cyanide

Method Number	Description	Measurement
OIA 1677	Ligand Exchange / Flow Injection Analysis	Gas Diffusion - Amperometry
ASTM D 6888	Ligand Exchange / Flow Injection Analysis	Gas Diffusion - Amperometry

GD-amperometry methods do not require distillation

O·I·Analytical

Ligand Exchange GD-amperometry methods get better recovery

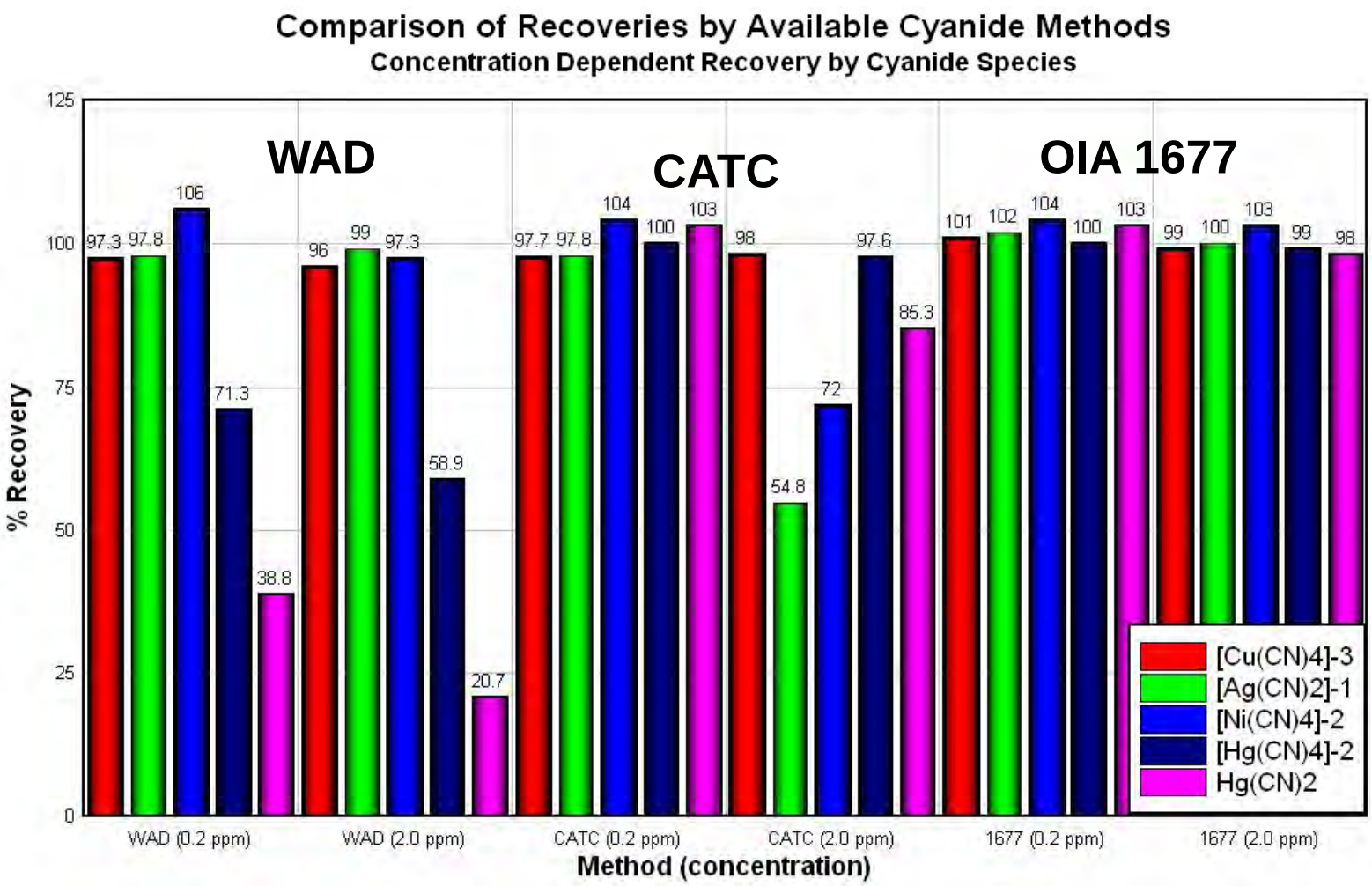

O·I·Analytical

Ligand Exchange GD-amperometry methods are more precise

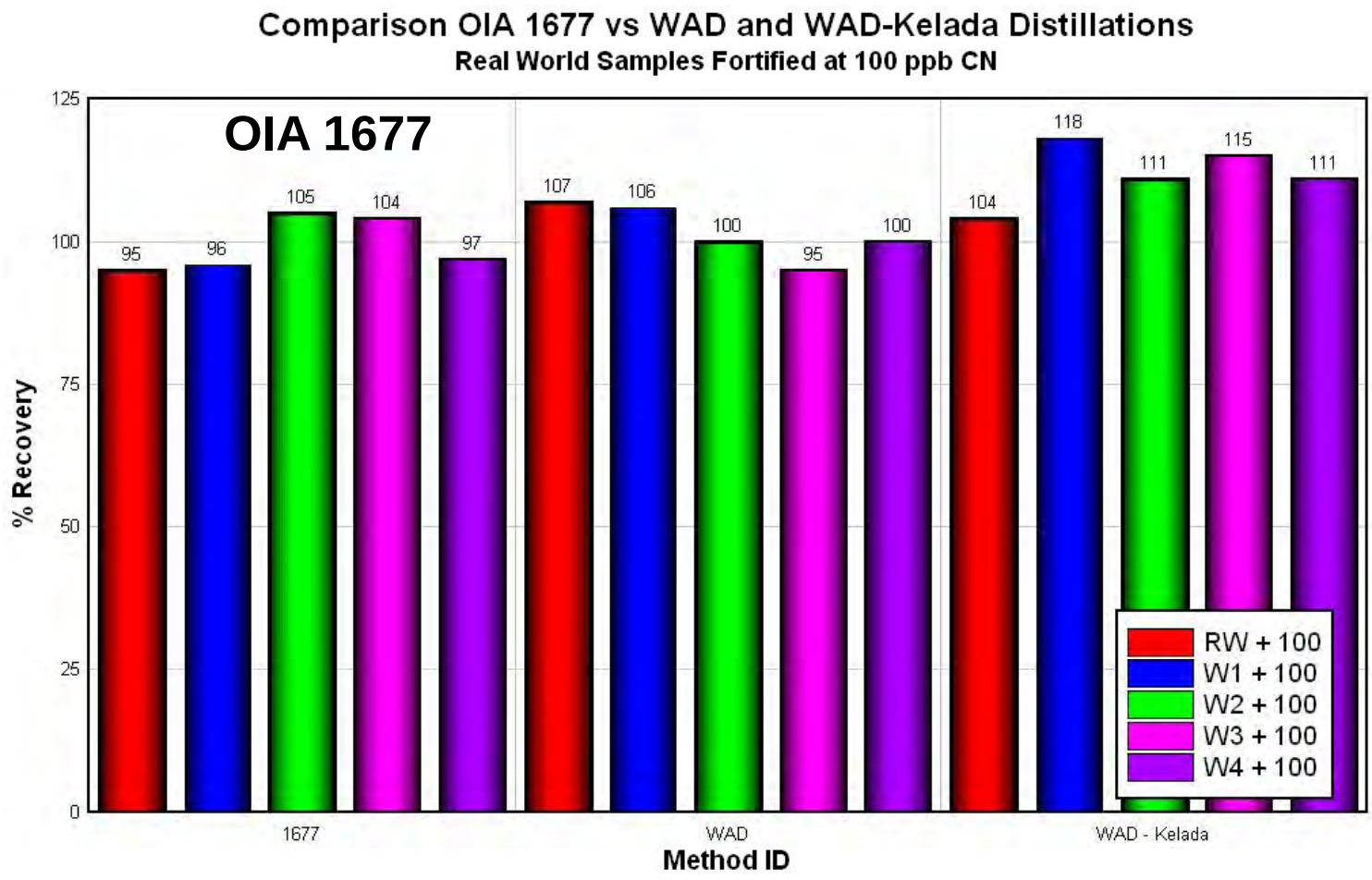

O·I·Analytical

OIA 1677 or ASTM D6888 flow diagram

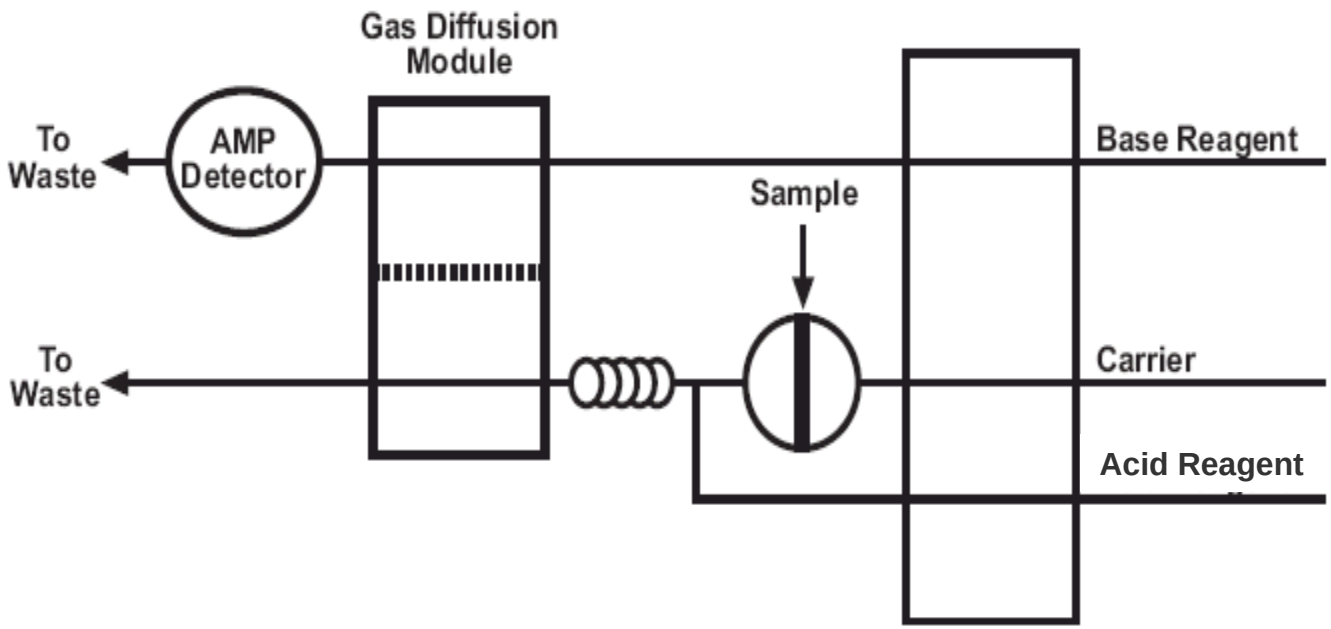

O·I·Analytical

Ligand Exchange GD-amperometry methods have fewer interferences

CATC	WAD	OIA 1677
N-organics	Excessive Iron Cyanide	None
SCN,NH_3,NO_2	Concentration Dependent	—
S_2O_3, H_2O_2	—	—
Concentration Dependent	—	—

O·I·Analytical

Ligand Exchange GD-amperometry methods give you results in minutes

	CATC	WAD	OIA 1677
Sample Preparation	2 distillations 2 – 3 hours	1 distillation 2 – 3 hours	No distillation
Analysis	1 – 2 minutes	1 – 2 minutes	1 – 2 minutes
Total Time	3 – 4 hours	3 – 4 hours	1 – 2 minutes

O·I·Analytical

Total Cyanide Analysis

Manual Distillation Methods

O·I·Analytical

Total cyanide methods using manual distillation

Descriptive Name	Method Number	Description	Measurement
Total Cyanide	EPA 335.4	Midi Distillation – $MgCl_2$	Automated Colorimetry
	ASTM D2036	Midi / Micro/macro Distillation – $MgCl_2$	Colorimetry/ISE/ amperometry/IC
	ASTM D 7284	Midi / Micro Distillation – $MgCl_2$	Gas Diffusion - Amperometry

O·I·Analytical

Most total cyanide analyses are by EPA 335.4 or similar

- Prolonged heating
- strong acid (pH <2)
- Purging into base
- Colorimetry

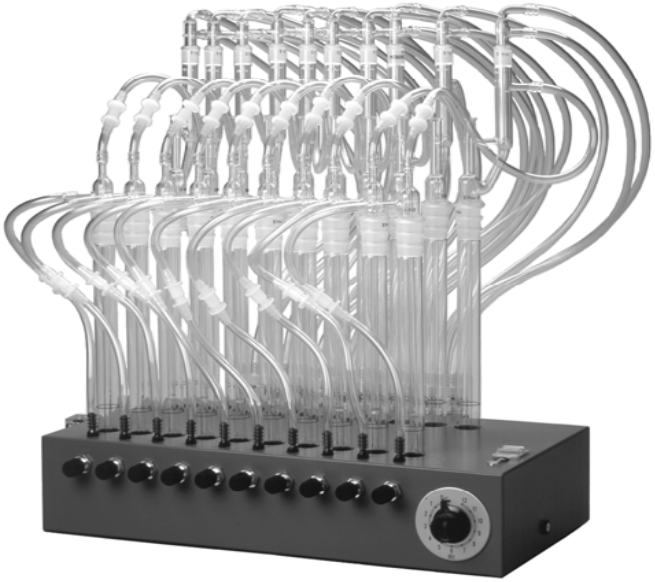

O·I·Analytical

Semi-automated colorimetric cyanide analysis flow diagram

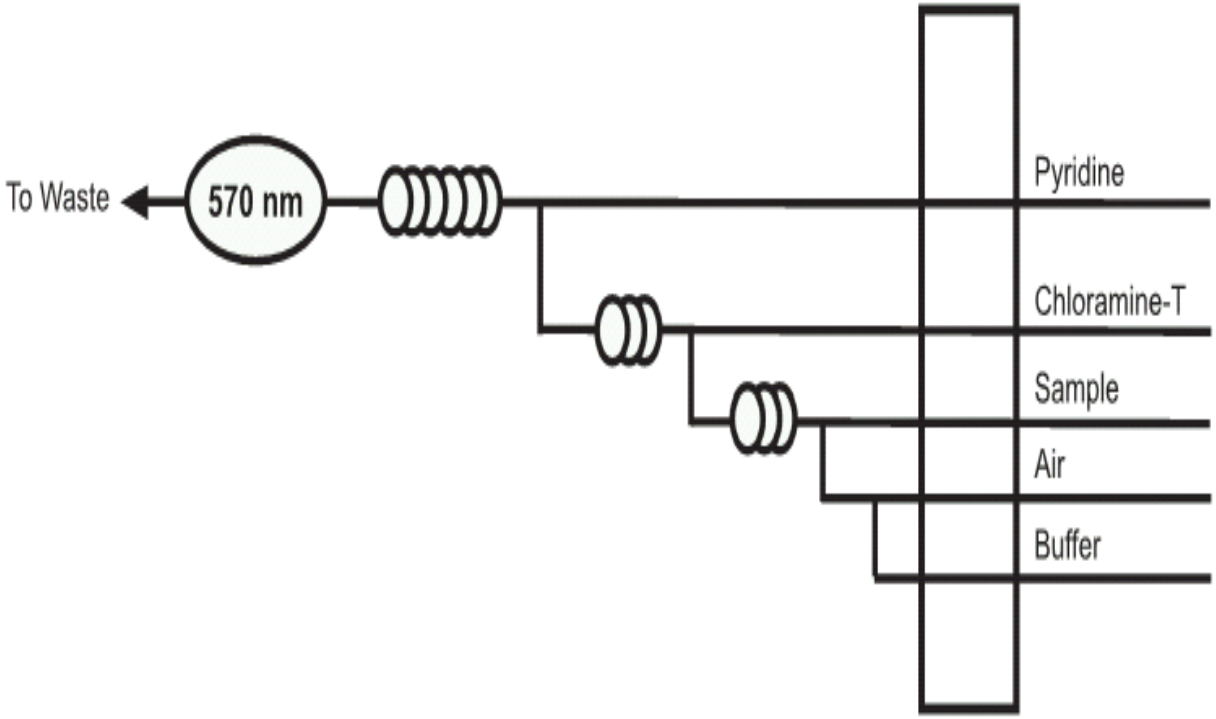

O·I·Analytical

The OIA1677 configuration is used to determine CN by ASTM D7284

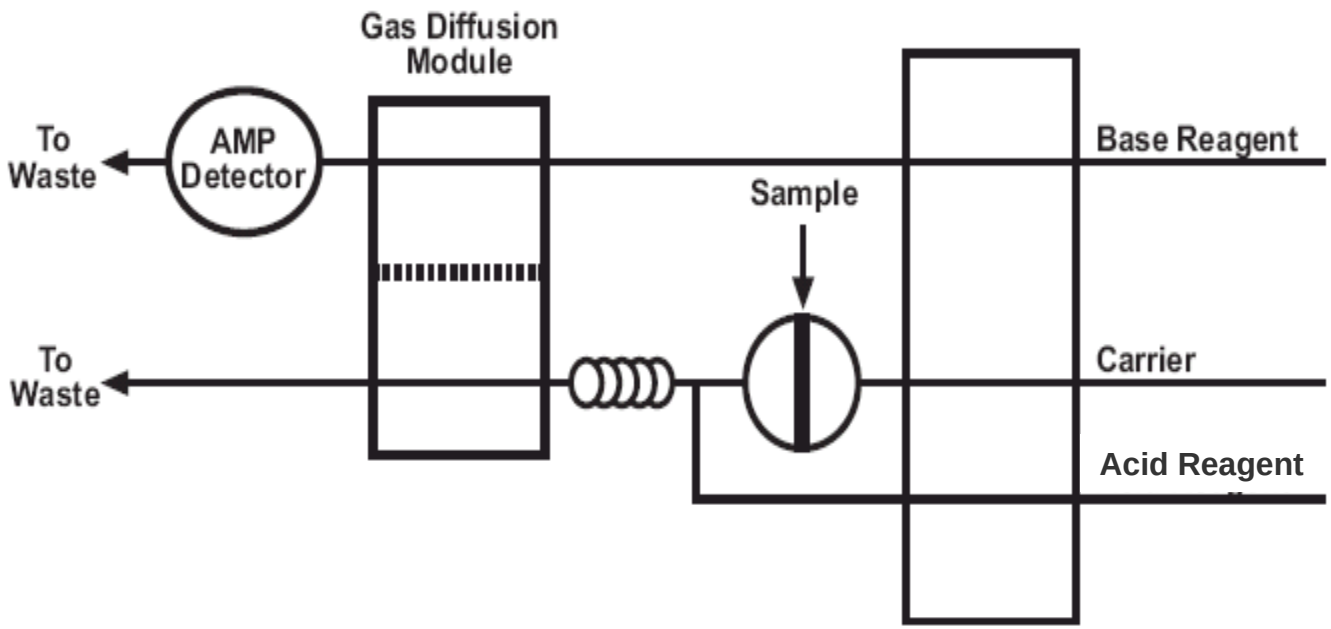

O·I·Analytical

GD-Amperometry results are equivalent to colorimetry on interference free samples

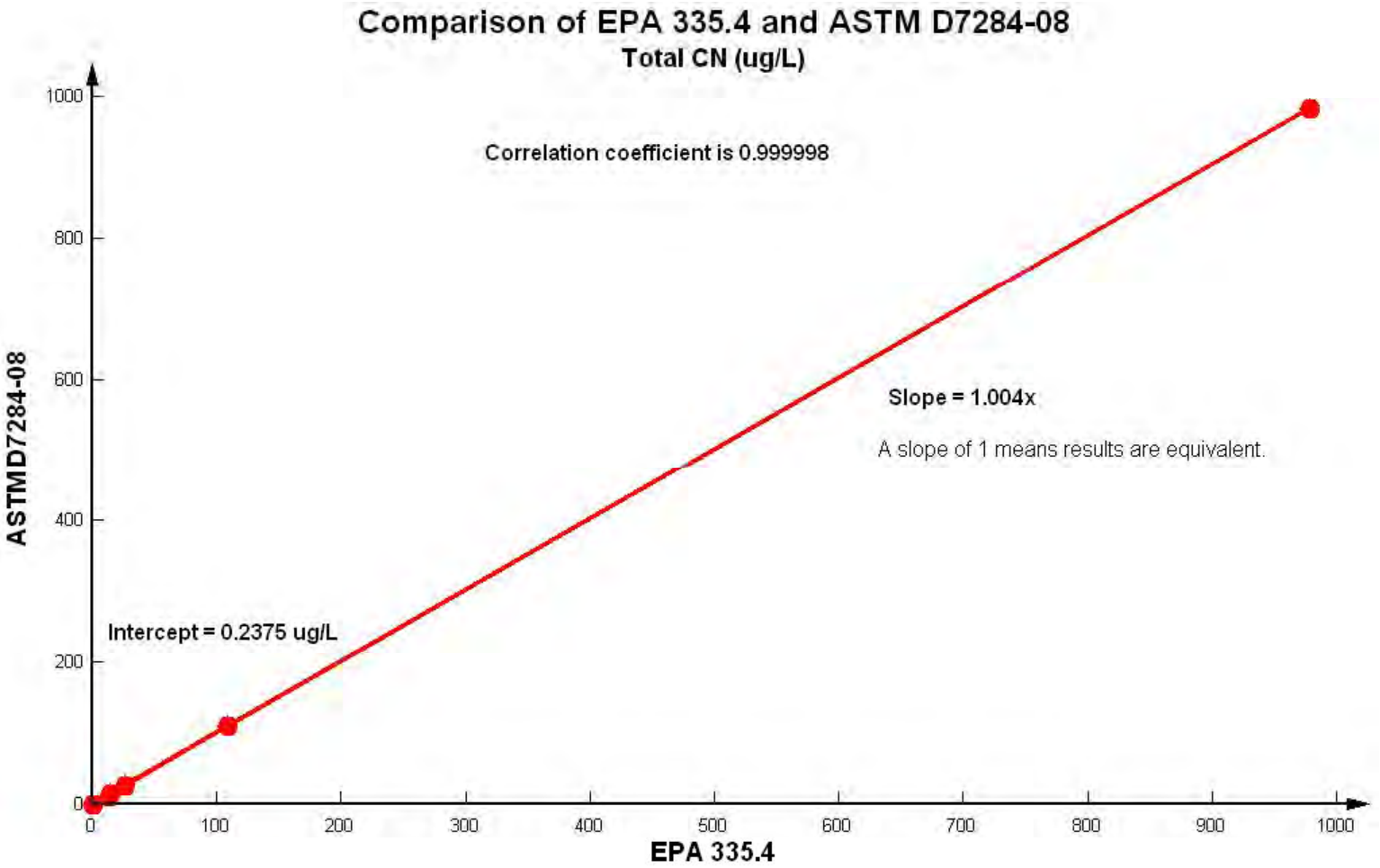

O·I·Analytical

Automated total cyanide methods use UV to liberate HCN from Fe

Descriptive Name	Method Number	Description	Measurement
Total Cyanide	ASTM D4374 (Kelada 01)	High power UV-Auto distillation Alkaline pH	Automated colorimetry
	ASTM D7511	Low power UV-pH <2	Gas Diffusion - Amperometry

$$[Fe(CN)_6]^{-3} + H^+ \xrightarrow{hv} 6\ HCN + Fe^{+3}$$

O·I·Analytical

A sample diagram of the Kelada 01 automated cyanide method

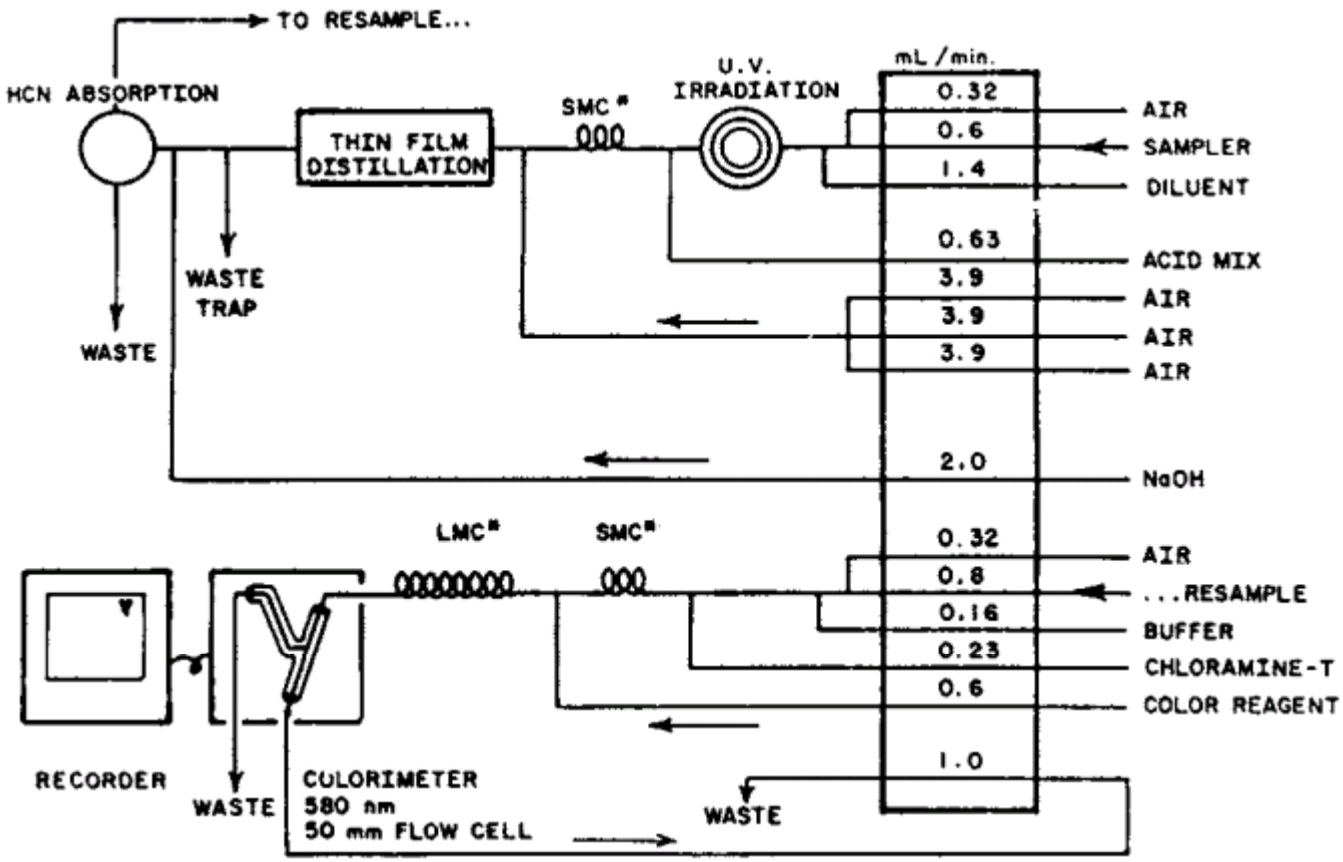

O·I·Analytical

A sample diagram of ASTM D7511

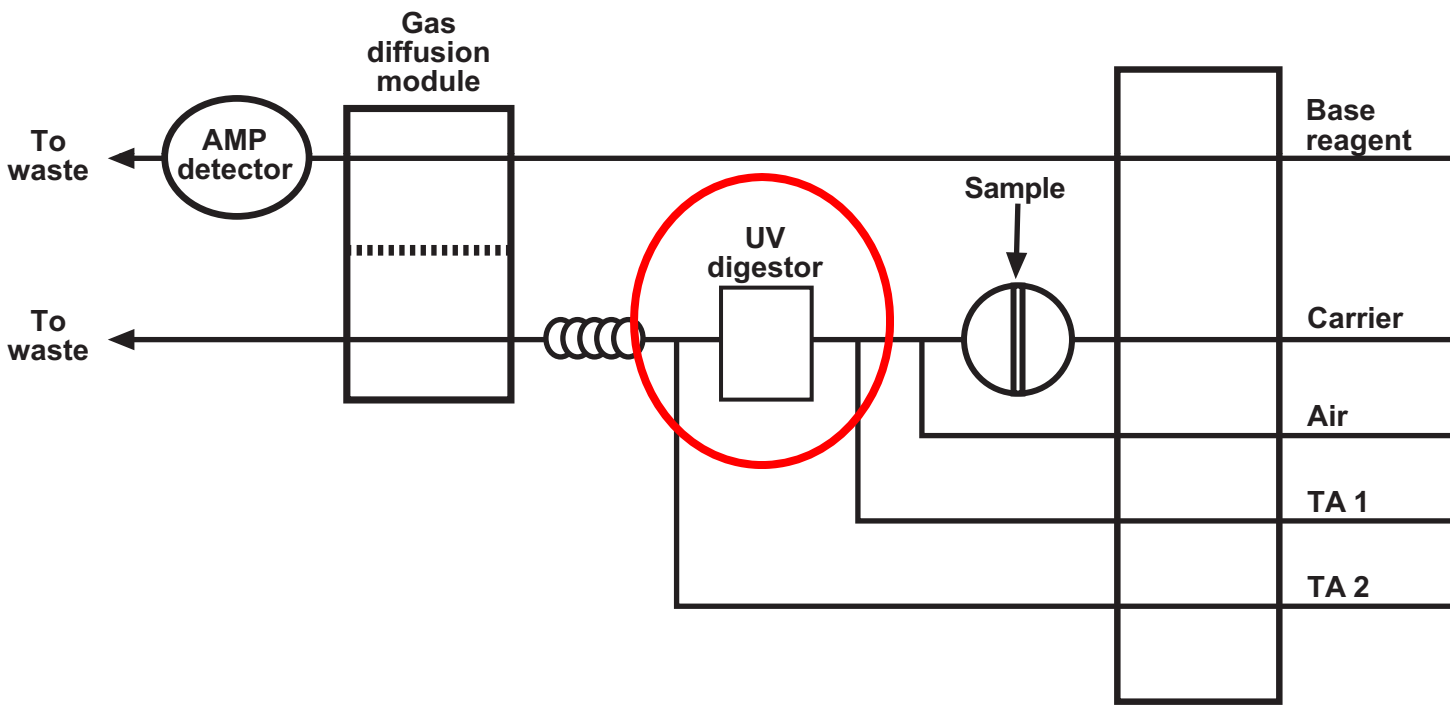

O·I·Analytical

Comparison of Kelada and ASTM D7511

	Kelada 01	ASTM D7511
Pump Tubes	15	5
Reagents	Pyridine	No Pyridine
Distillation	Yes	No
SCN Interaction	0.25 – 0.5 %	0.01 – 0.03 %

O·I·Analytical

Comparison of Total CN methods

	335.4	ASTM D7284	ASTM D7511
Sample Preparation	2 – 3 hour distillation	1 – 3 hour distillation	No distillation
Analysis	1 – 2 minutes	1 – 2 minutes	1 – 2 minutes
Total Time	3 – 4 hours	2 – 4 hours	1 – 2 minutes

O·I·Analytical

Playing against the odds

ASTM D7511 obtains “equivalent” recovery to EPA335.4

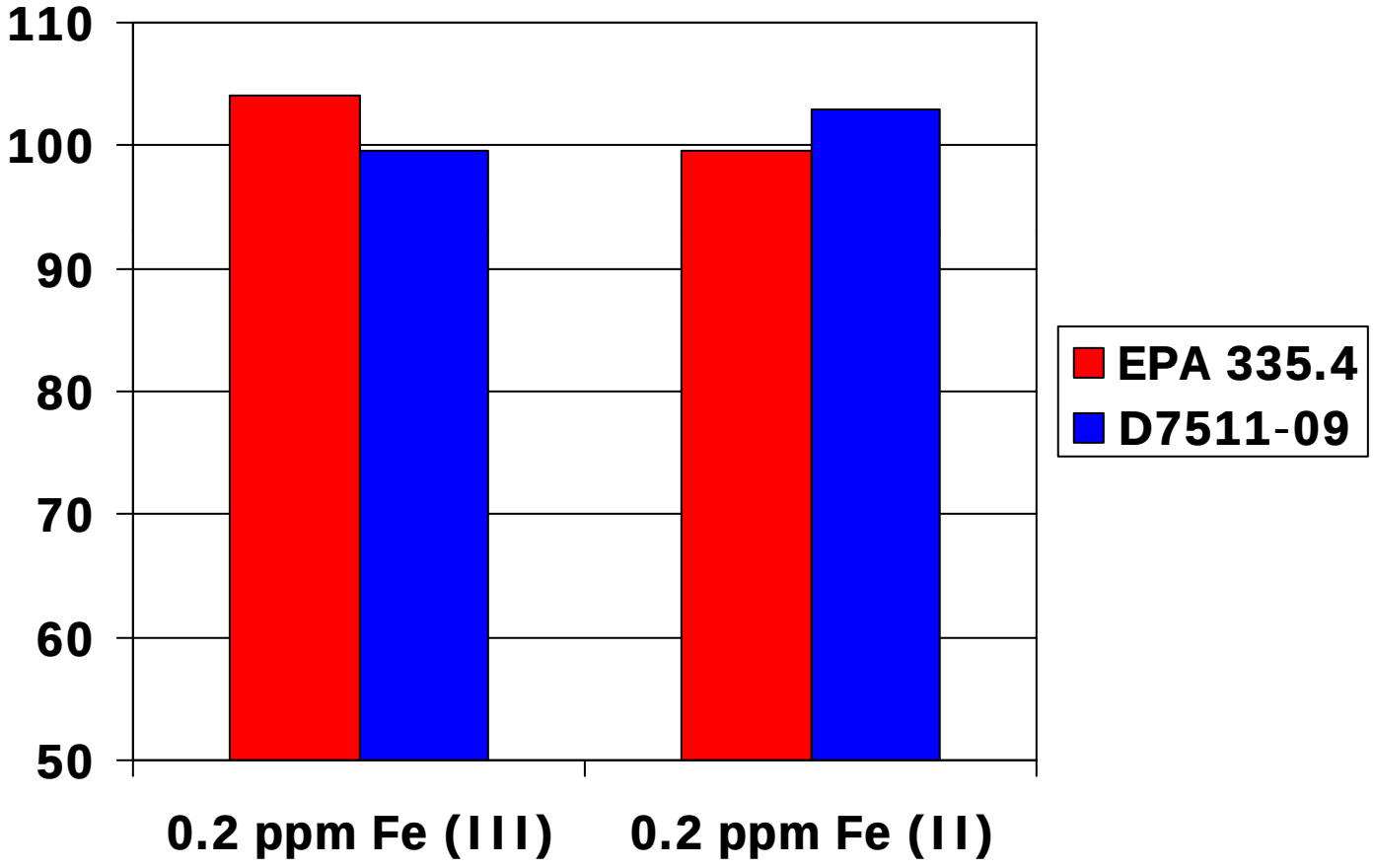

O·I·Analytical

ASTM D7511 evaluated 15 metal-cyanide complexes for recovery

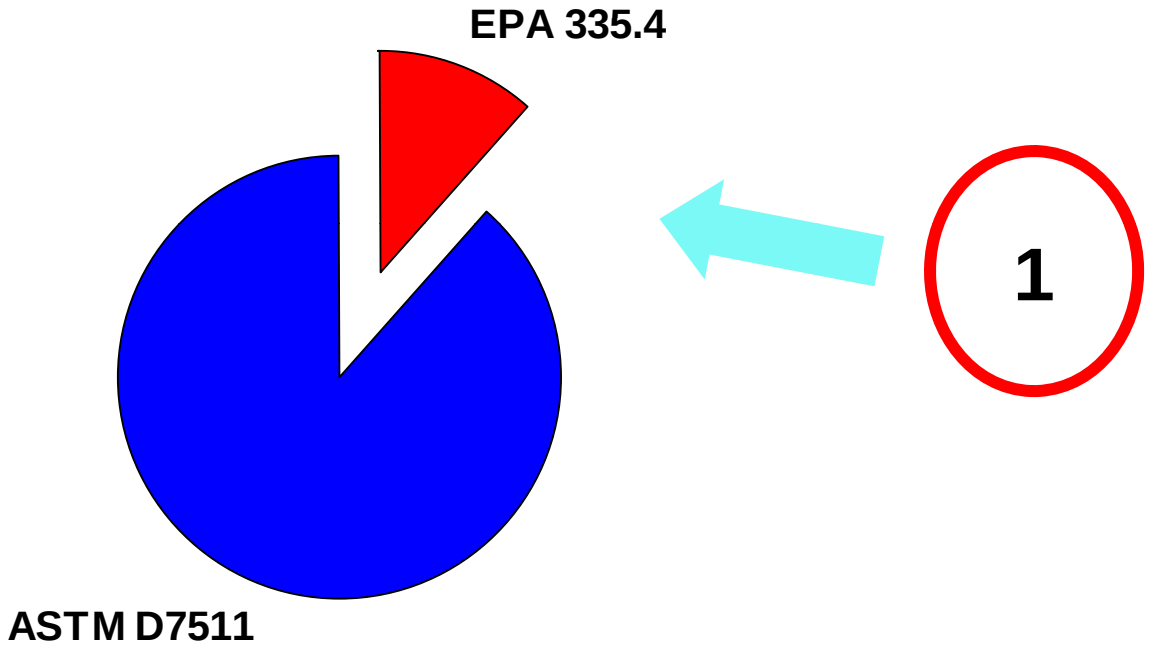

O·I·Analytical

ASTM D7511 evaluated 9 matrices by interlaboratory trial

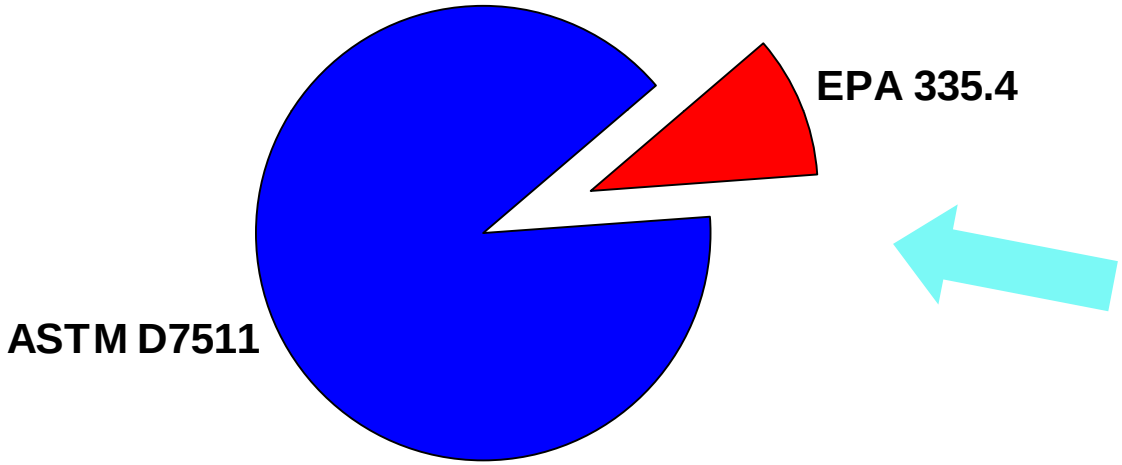

1

O·I·Analytical

ASTM D7511 evaluated interferences with and without CN present

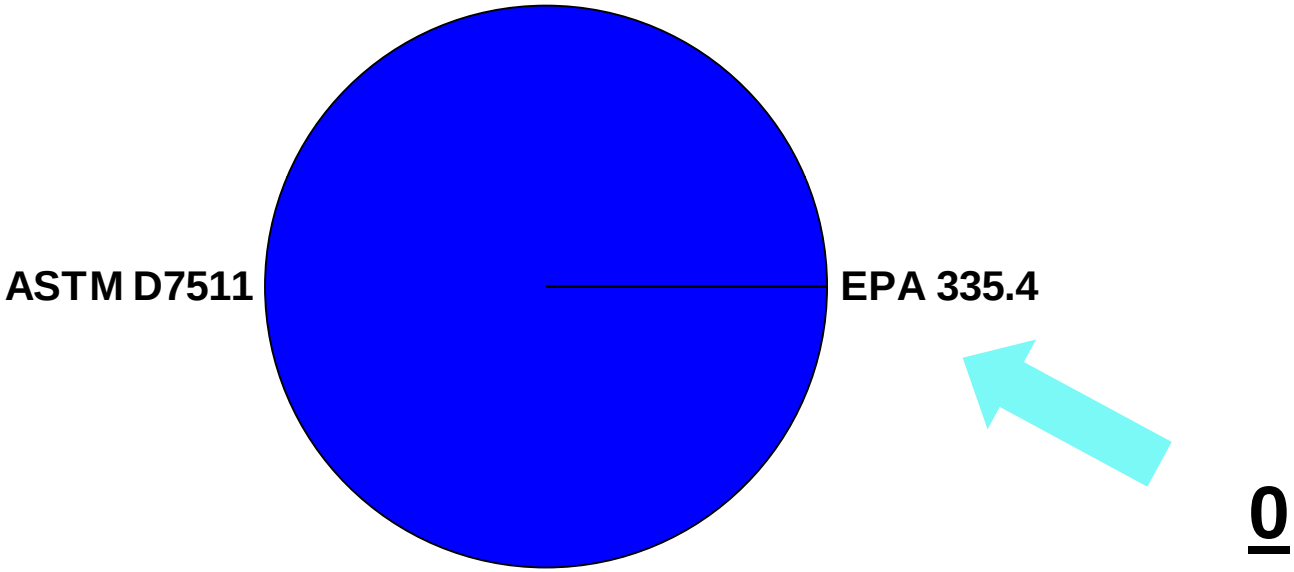

0

O·I·Analytical

ASTM D7511 evaluated lower concentrations during inter-lab study

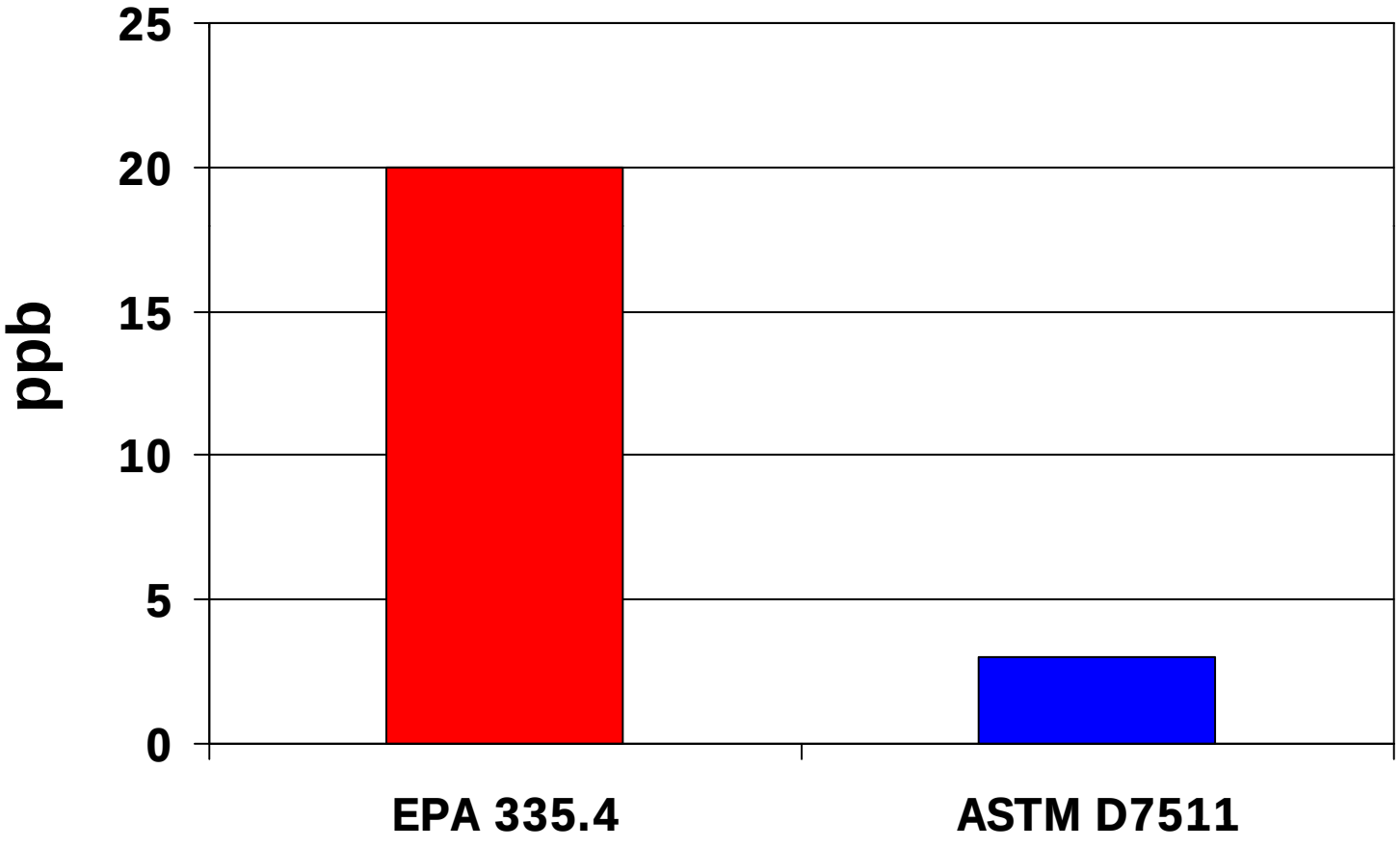

O·I·Analytical

ASTM D7511 obtains lower results on the ASTM "challenge matrix"

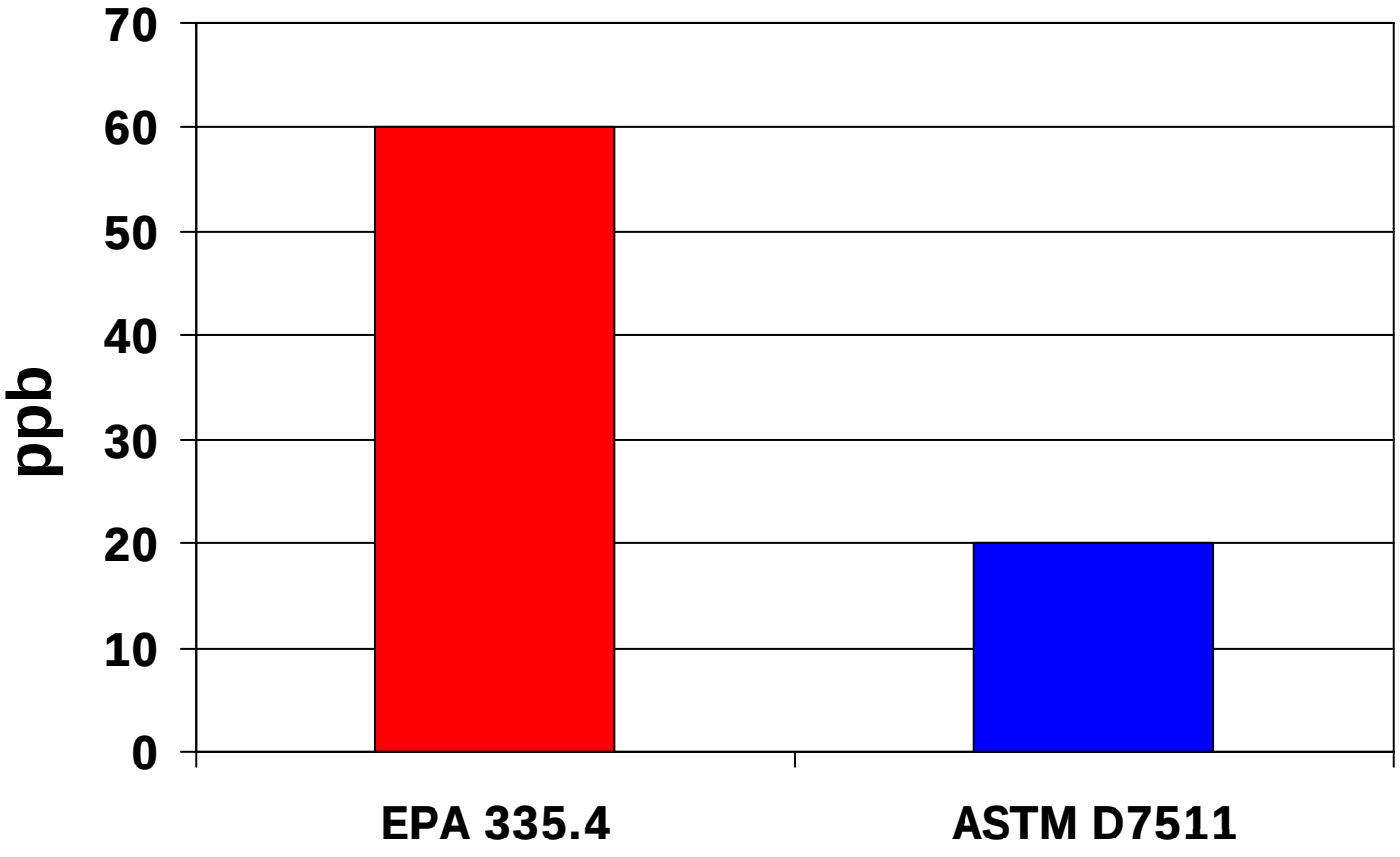

O·I·Analytical

ASTM D7511-09 has fewer interferences than distillation

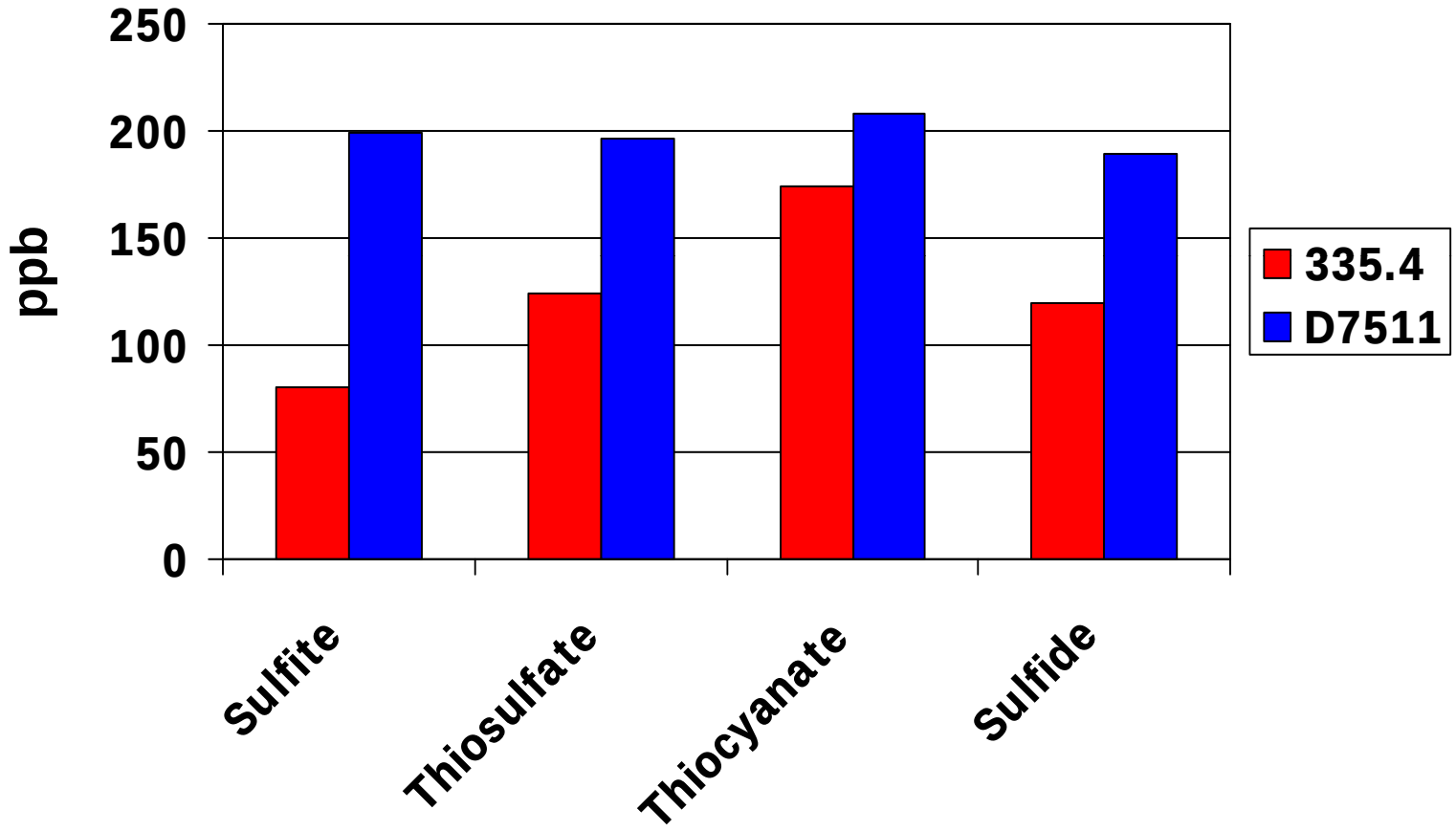

20 ppm interferent

O·I·Analytical

ASTM D7511 analyzes samples without distillation, shortening time to results

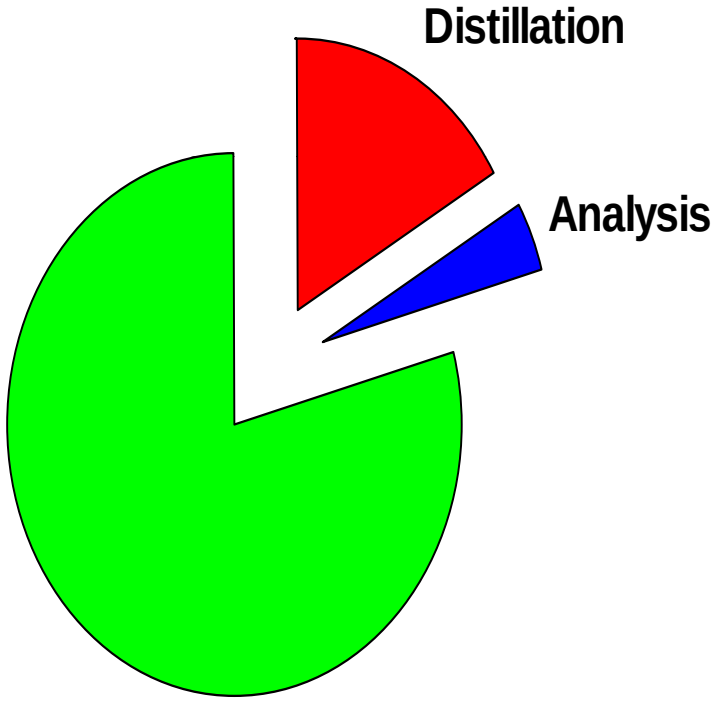

O·I·Analytical

A summary of “free” Cyanide Methods

Free CN	Diffusion/Colorimetry	ASTM D4282
	GD-Amperometry	ASTM D7237
WAD CN	Distillation/ Colorimetry	ASTM D2036 or SM4500
CATC	Chlorination Distillation/ Colorimetry	ASTM D2036 or SM4500
Available CN	LE GD-Amperometry	OIA 1677 or ASTM D6888

O·I·Analytical

Manual distillation total cyanide methods

Method Number	Description	Measurement
SM 4500-CN C	Manual Macro Distillation – Mg Cl_2	Manual colorimetry / ISE
ASTM D 2036	Manual Macro/Midi/Micro Distillation – $MgCl_2$	Manual colorimetry, ISE, GD-amperometry, IC
EPA 335.4	Midi Distillation – $MgCl_2$	Automated Colorimetry
ASTM D 7284	Midi / Micro Distillation – $MgCl_2$	Gas Diffusion - Amperometry

O·I·Analytical

Automated total cyanide methods

Descriptive Name	Method Number	Description	Measurement
Total Cyanide	ASTM D4374 (Kelada 01)	High power UV-Auto distillation Alkaline pH	Automated colorimetry
	ASTM D7511	Low power UV-pH <2	Gas Diffusion - Amperometry

O·I·Analytical

GD-amperometry methods provide the best benefits

- No distillation
  - Or pyridine barbituric acid
- Low MDL (0.5 ppb)
- Fewer Interferences
- High Throughput
- Ease of Operation

O·I·Analytical

Thank You

Questions?

For more information contact

www.oico.com

O·I·Analytical