O·I·Analytical

Methodology

Orthophosphate in Seawater by Segmented Flow Analysis (SFA)

(Cartridge Part #A002604)

1.0 Scope and Application

1.1 This method is used for the determination of orthophosphate in seawater.

1.2 The Method Detection Limit (MDL) of this method is 0.009 µmoles/L orthophosphate. The applicable range of the method is 0.02–10 µmoles/L orthophosphate. The range may be extended to analyze higher concentrations by sample dilution.

2.0 Summary of Method

2.1 Orthophosphate reacts with molybdenum(VI) and antimony(III) in an acidic solution to form an antimony-phosphomolybdate complex. This complex is subsequently reduced with ascorbic acid to form a blue color, and the absorbance is measured at 880 nm (Reference 15.3).

2.2 The quality of the analysis is assured through reproducible calibration and testing of the Segmented Flow Analysis (SFA) system.

2.3 A general flow diagram of the SFA system is shown below (see Section 17.0 for a detailed flow diagram).

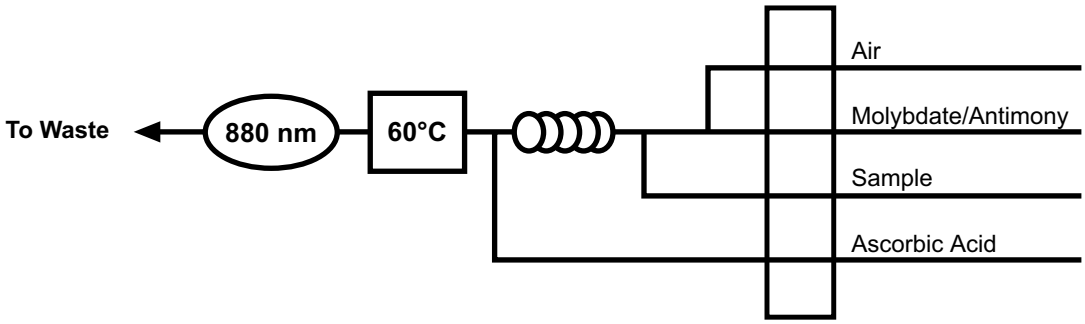

3.0 Definitions

Definitions for terms used in this method are provided in Section 16.0, "Glossary of Definitions and Purposes."

4.0 Interferences

4.1 Filter turbid samples prior to analysis.

4.2 The presence of more than 40 mg/L of iron(III), more than 10 mg/L of copper, or more than 10 mg/L of silica may interfere.

4.3 Samples with background absorbance at the analytical wavelength may interfere.

5.0 Safety

5.1 The toxicity or carcinogenicity of each compound or reagent used in this method has not been fully established. Each chemical should be treated as a potential health hazard. Exposure to these chemicals should be reduced to the lowest possible level.

5.2 For reference purposes, a file of Material Safety Data Sheets (MSDS) for each chemical used in this method should be available to all personnel involved in this chemical analysis. The preparation of a formal safety plan is also advisable.

5.3 The following chemicals used in this method may be highly toxic or hazardous and should be handled with extreme caution at all times. Consult the appropriate MSDS before handling.

5.3.1 Ammonium Molybdate Tetrahydrate, $(NH_4)_6Mo_7O_{24}\bullet 4H_2O$ (FW 1,235.95)

5.3.2 Antimony Potassium Tartrate Hemihydrate, $K(SbO)C_4H_4O_6\bullet ½H_2O$ (FW 324.92)

5.3.3 Hydrochloric Acid, concentrated, HCl (FW 36.46)

5.3.4 Magnesium Sulfate Heptahydrate, $MgSO_4\bullet 7H_2O$ (FW 246.48)

5.3.5 Potassium Phosphate Monobasic, KH_2PO_4 (FW 136.09)

5.3.6 Sodium Chloride, NaCl (FW 58.44)

5.3.7 Sodium Hydroxide, NaOH (FW 40.00)

5.3.8 Sulfuric Acid, concentrated, H_2SO_4 (FW 98.08)

5.4 Unknown samples may be potentially hazardous and should be handled with extreme caution at all times.

5.5 Proper personal protective equipment (PPE) should be used when handling or working in the presence of chemicals.

5.6 This method does not address all safety issues associated with its use. The laboratory is responsible for maintaining a safe work environment and a current awareness file of OSHA regulations regarding the safe handling of the chemicals specified in this method.

6.0 Apparatus, Equipment, and Supplies

6.1 Segmented Flow Analysis (SFA) System (OI Analytical Flow Solution® IV) consisting of the following:

6.1.1 Model 502 Multichannel Peristaltic Pump

6.1.2 Random Access (RA) Autosampler

6.1.3 Expanded Range (ER) Photometric Detector with 10-mm path length flowcell and 880-nm optical filter

6.1.4 Data Acquisition System (PC or Notebook PC) with WinFLOW™ software

6.1.5 Orthophosphate in Seawater Cartridge (Part #A002604)

6.2 Sampling equipment—Sample bottle, amber glass, with polytetrafluoroethylene (PTFE)-lined cap. Clean by washing with detergent and water, rinsing with two aliquots of reagent water, and drying by baking at 110°–150°C for a minimum of one hour.

6.3 Standard laboratory equipment including volumetric flasks, pipettes, syringes, etc. should all be cleaned, rinsed, and dried per bottle cleaning procedure in Section 6.2.

7.0 Reagents and Calibrants

7.1 Raw Materials

7.1.1 Ammonium Molybdate Tetrahydrate, $(NH_4)_6Mo_7O_{24}\bullet 4H_2O$ (FW 1,235.95)

7.1.2 Antimony Potassium Tartrate Hemihydrate, $K(SbO)C_4H_4O_6\bullet ½H_2O$ (FW 324.92)

7.1.3 Ascorbic Acid, $C_6H_8O_6$ (FW 176.12)

7.1.4 Deionized Water (ASTM Type I or II)

7.1.5 DOWFAX® 2A1 (Part #A000080)

7.1.6 Hydrochloric Acid, concentrated, HCl (FW 36.46)

7.1.7 Magnesium Sulfate Heptahydrate, $MgSO_4\bullet 7H_2O$ (FW 246.48)

7.1.8 Potassium Phosphate Monobasic, KH_2PO_4 (FW 136.09)

7.1.9 Sodium Chloride, NaCl (FW 58.44)

7.1.10 Sodium Hydroxide, NaOH (FW 40.00)

7.1.11 Sulfuric Acid, concentrated, H_2SO_4 (FW 98.08)